SOLENOID VALVE
EV06-2A

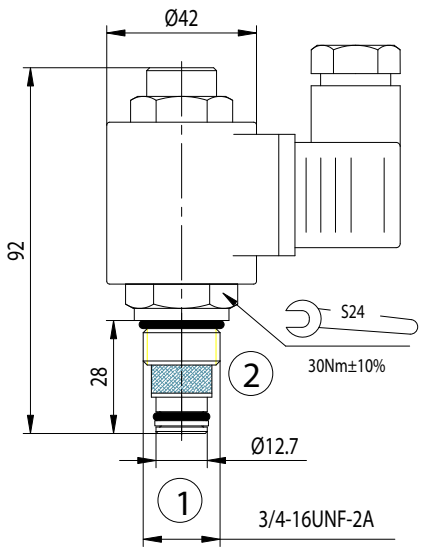

DESCRIPTION

A solenoid-operated, 2-way, piloted, poppet-type, normally open, screw-in, hydraulic cartridge valve designed for low leakage in load-holding applications.

OPERATION

When de-energized, the EV06-2A allows flow from 2 to 1. Flow from 1 to 2 is severely restricted in this mode.
When energized, the valve's poppet closes on its seat, blocking flow from 2 to 1. In this mode the cartridge will allow 1 to 2 flow after overcoming the solenoid force.

RATINGS

Operating Pressure: 250 bar
Flow: See Performance Chart
Internal Leakage: 0.25 cc/minute max. at 250 bar
Temperature: -20 to 90°C with standard Buna N seals
Coil Duty Rating: Continuous from 85 % to 115 % of nominal voltage
Minimum Pull-in Voltage: 85 % of nominal at 250 bar
Filtration: Recommend 25 µm nominal or better
Fluids: Mineral-based or synthetics with lubricating properties at viscosities of 7.4 to 420 cSt
Installation: No restrictions
Cavity: CC06-2; See page 8.2.01

SYMBOL

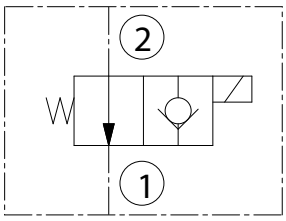

CAVITY

See page 8.2.01

TO ORDER

EV06-2A

Voltage	Seals
0 - Without coil	N - Buna N
12 - 12 V DC	V - Viton A
24 - 24 V DC	
11 - 110V RAC	
22 - 220V RAC	

Terminations DIN 43650 See page 8.1.01

PERFORMANCE (Carttridge Only)

From 2 to 1
32cSt oil at 40°C

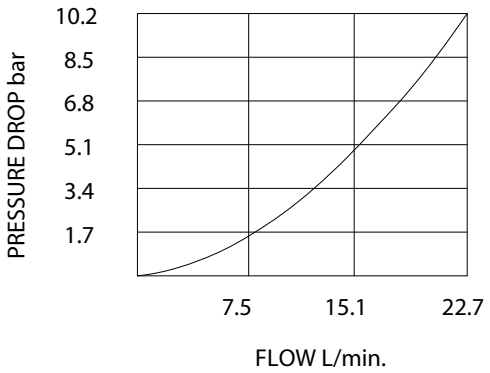

SOLENOID VALVE
EV08-2A

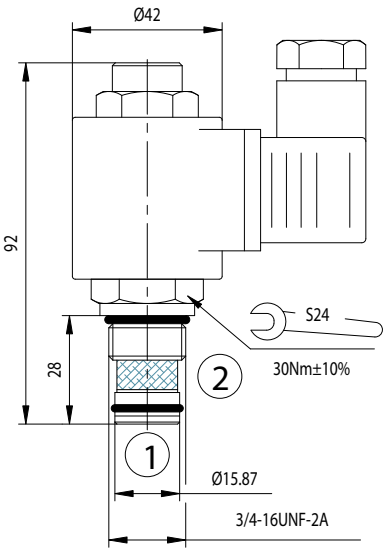

DESCRIPTION

A solenoid-operated, 2-way, piloted, poppet-type, normally open, screw-in, hydraulic cartridge valve designed for low leakage in load-holding applications.

OPERATION

When de-energized, the EV08-2A allows flow from 2 to 1. Flow from 1 to 2 is severely restricted in this mode.

When energized, the valve's poppet closes on its seat, blocking flow from 2 to 1. In this mode the cartridge will allow 1 to 2 flow after overcoming the solenoid force.

RATINGS

Operating Pressure: 250 bar
Flow: See Performance Chart
Internal Leakage: 0.25 cc/minute max. at 250 bar
Temperature: -20 to 90°C with standard Buna N seals
Coil Duty Rating: Continuous from 85 % to 115 % of nominal voltage
Minimum Pull-in Voltage: 85 % of nominal at 250 bar
Filtration: Recommend 25 µm nominal or better
Fluids: Mineral-based or synthetics with lubricating properties at viscosities of 7.4 to 420 cSt
Installation: No restrictions
Cavity: CC08-2; See page 8.2.01

SYMBOL

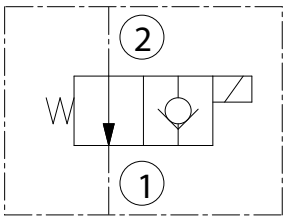

CAVITY

See page 8.2.01

TO ORDER

EV08-2A

Voltage	Seals
0 - Without coil	N - Buna N
12 - 12 V DC	V - Viton A
24 - 24 V DC	
11 - 110V RAC	
22 - 220V RAC	

Terminations DIN 43650 See page 8.1.01

PERFORMANCE (Cartridge Only)

From 2 to 1
32cSt oil at 40°C

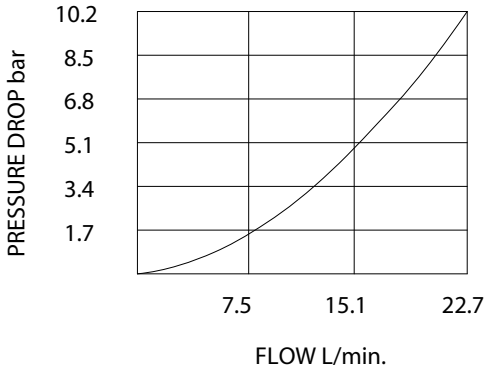

SOLENOID VALVE
EV10-2A

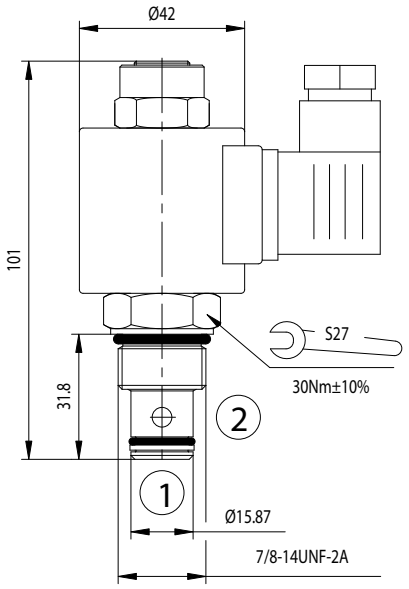

DESCRIPTION

A solenoid-operated, 2-way, piloted, poppet-type, normally open, screw-in, hydraulic cartridge valve designed for low leakage in load-holding applications.

OPERATION

When de-energized, the EV10-2A allows flow from 2 to 1. Flow from 1 to 2 is severely restricted in this mode. If the 1 to 2 path is required, see model EV10-2F, page 1.6.03

When energized, the valve's poppet closes on its seat, blocking flow in the 2 to 1 direction. In this mode the cartridge will allow 1 to 2 flow after overcoming the solenoid force

RATINGS

Operating Pressure: 210 bar
Flow: See Performance Chart
Internal Leakage: 0.25 cc/minute max. at 210 bar
Temperature: -20 to 90°C with standard Buna seals
Coil Duty Rating: Continuous from 85 % to 115 % of nominal voltage
Minimum Pull-in Voltage: 85 % of nominal at 210 bar
Filtration: Recommend 25 µm nominal or better
Fluids: Mineral-based or synthetics with lubricating properties at viscosities of 7.4 to 420 cSt
Installation: No restrictions
Cavity: CC10-2; See page 8.2.04

SYMBOL

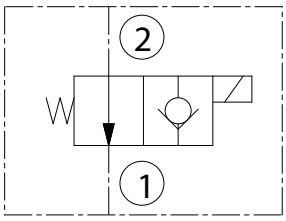

CAVITY

See page 8.2.04

TO ORDER

EV10-2A

Voltage	Seals
0 - Without coil	N - Buna N
12 - 12 V DC	V - Viton A
24 - 24 V DC	
11 - 110V RAC	
22 - 220V RAC	

Terminations DIN 43650 See page 8.1.01

PERFORMANCE (Cartridge Only)

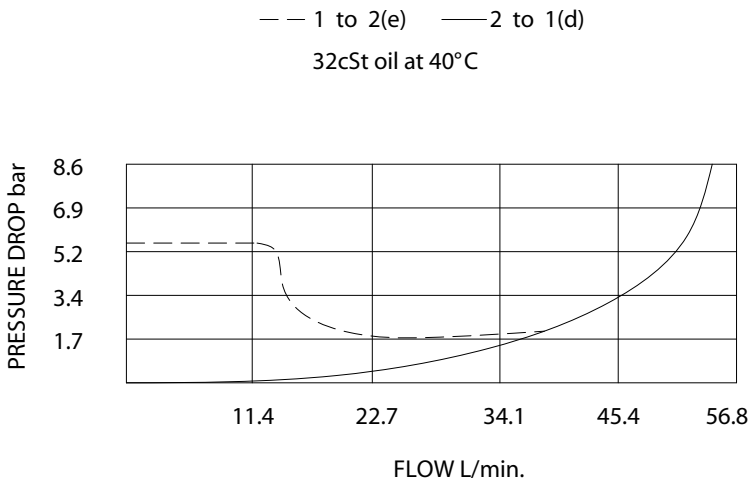

SOLENOID VALVE
EV06-2B

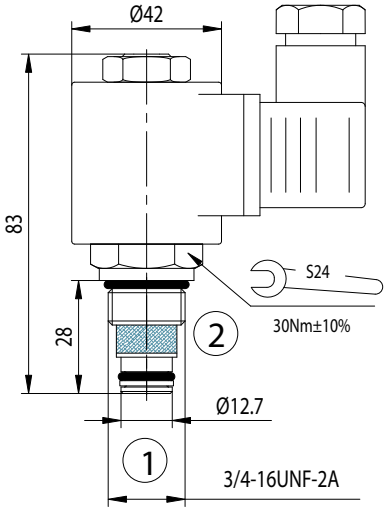

DESCRIPTION

A solenoid-operated, 2-way, normally closed, piloted poppet-type, screw-in hydraulic cartridge valve, intended to act as a blocking or load-holding device for low flow circuits.

OPERATION

When de-energized, the EV06-2B acts as a check valve, allowing flow from 1 to 2, while blocking flow from 2 to 1.

When energized, the cartridge's poppet lifts to open the 2 to 1 flow path. In this mode, flow from 1 to 2 is severely restricted.

RATINGS

Operating Pressure: 250 bar
Flow: See Performance Chart
Internal Leakage: 0.25 cc/minute max. at 250 bar
Temperature: -20 to 90°C with standard Buna N seals
Coil Duty Rating: Continuous from 85 % to 115 % of nominal voltage
Minimum Pull-in Voltage: 85 % of nominal at 250 bar
Filtration: Recommend 25 µm nominal or better
Fluids: Mineral-based or synthetics with lubricating properties at viscosities of 7.4 to 420 cSt
Installation: No restrictions
Cavity: CC06-2; See page 8.2.01

SYMBOL

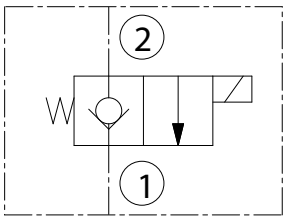

CAVITY

See page 8.2.01

TO ORDER

EV06-2B

Voltage	Seals
0 - Without coil	N - Buna N
12 - 12 V DC	V - Viton A
24 - 24 V DC	
11 - 110V RAC	
22 - 220V RAC	

Terminations DIN 43650 See page 8.1.01

PERFORMANCE (Cartridge Only)

From 2 to 1

32cSt oil at 40°C

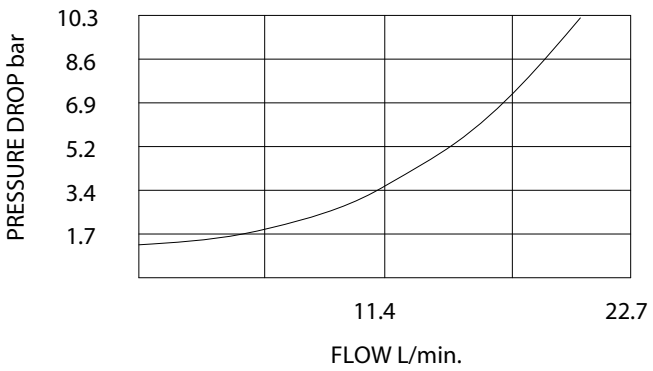

SOLENOID VALVE
EV56-2B

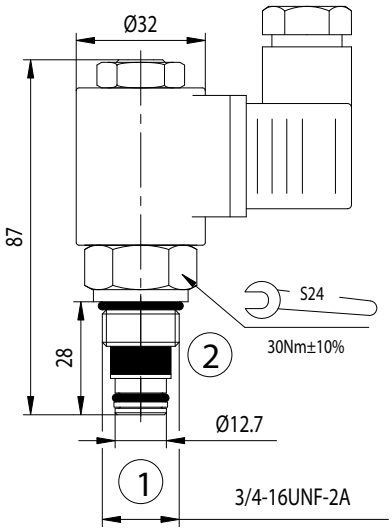

DESCRIPTION

A solenoid-operated, 2-way, normally closed, piloted poppet-type, screw-in hydraulic cartridge valve, intended to act as a blocking or load-holding device for low flow circuits.

OPERATION

When de-energized, the EV56-2B acts as a check valve, allowing flow from 1 to 2, while blocking flow from 2 to 1.

When energized, the cartridge's poppet lifts to open the 2 to 1 flow path. In this mode, flow from 1 to 2 is severely restricted.

RATINGS

Operating Pressure: 200 bar
Flow: See Performance Chart
Internal Leakage: 0.25 cc/minute max. at 200 bar
Temperature: -20 to 90°C with standard Buna N seals
Coil Duty Rating: Continuous from 85 % to 115 % of nominal voltage
Minimum Pull-in Voltage: 85 % of nominal at 200 bar
Filtration: Recommend 25 µm nominal or better
Fluids: Mineral-based or synthetics with lubricating properties at viscosities of 7.4 to 420 cSt
Installation: No restrictions
Cavity: CC06-2; See page 8.2.01

SYMBOL

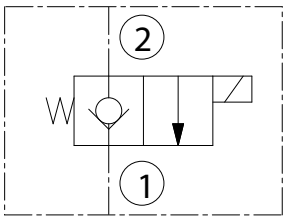

CAVITY

See page 8.2.01

TO ORDER

EV56-2B

Voltage	Seals
0 - Without coil	N - Buna N
12 - 12 V DC	V - Viton A
24 - 24 V DC	
11 - 110V RAC	
22 - 220V RAC	

Terminations DIN 43650 See page 8.1.01

PERFORMANCE (Cartridge Only)

From 2 to 1

32cSt oil at 40°C

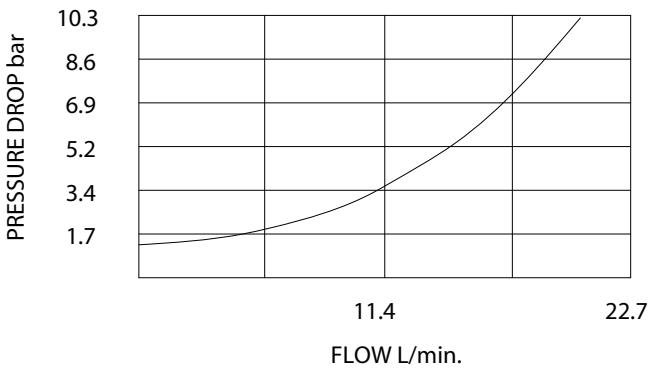

SOLENOID VALVE
EV08-2B

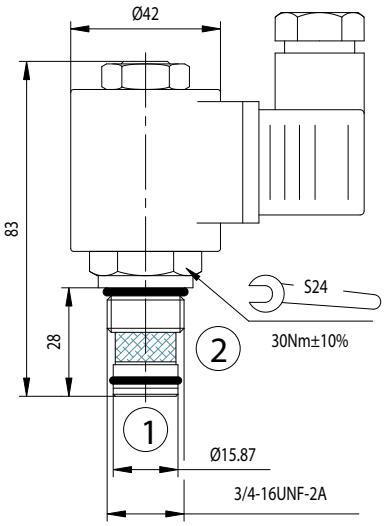

DESCRIPTION

A solenoid-operated, 2-way, normally closed, piloted poppet-type, screw-in hydraulic cartridge valve, intended to act as a blocking or load-holding device for low flow circuits.

OPERATION

When de-energized, the EV08-2B acts as a check valve, allowing flow from 1 to 2, while blocking flow from 2 to 1.

When energized, the cartridge's poppet lifts to open the 2 to 1 flow path. In this mode, flow from 1 to 2 is severely restricted. If this path is required, see model EV08-2E, page 1.5.03

RATINGS

Operating Pressure: 250 bar
Flow: See Performance Chart
Internal Leakage: 0.25 cc/minute max. at 250 bar
Temperature: -20 to 90°C with standard Buna seals
Coil Duty Rating: Continuous from 85 % to 115 % of nominal voltage
Minimum Pull-in Voltage: 85 % of nominal at 250 bar
Filtration: Recommend 25 µm nominal or better
Fluids: Mineral-based or synthetics with lubricating properties at viscosities of 7.4 to 420 cSt
Installation: No restrictions
Cavity: CC08-2; See page 8.2.01

SYMBOL

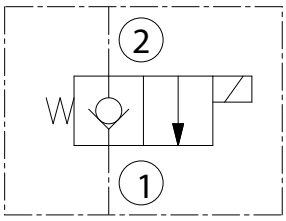

CAVITY

See page 8.2.01

TO ORDER

EV08-2B

Voltage	Seals
0 - Without coil	N - Buna N
12 - 12 V DC	V - Viton A
24 - 24 V DC	
11 - 110V RAC	
22 - 220V RAC	

Terminations DIN 43650 See page 8.1.01

PERFORMANCE (Cartridge Only)

From 2 to 1

32cSt oil at 40°C

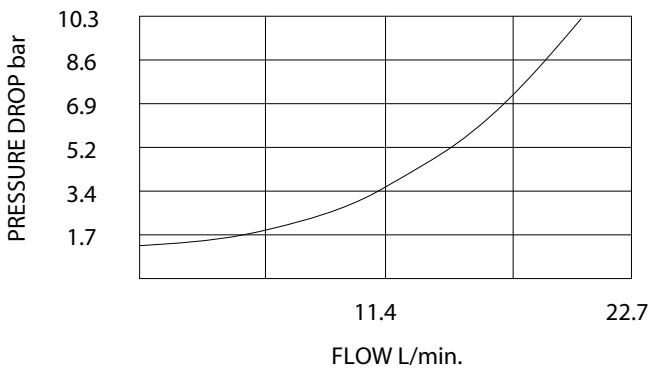

SOLENOID VALVE
EV10-2B

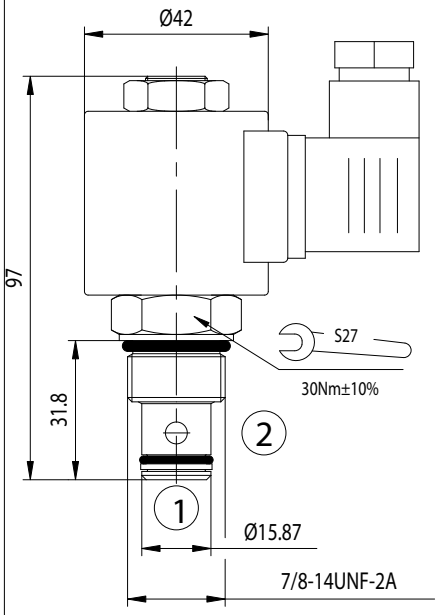

DESCRIPTION

A solenoid-operated, 2-way, normally closed, poppet-type, screw-in hydraulic cartridge valve, designed to function as a load holding or blocking valve in applications requiring low internal leakage.

OPERATION

When de-energized, the EV10-2B acts as a check valve, allowing flow to pass from 1 to 2, while blocking flow in the reverse direction.
When energized, the poppet lifts to open the 2 to 1 flow path. In this mode, flow from 1 to 2 is severely restricted. If this path is required, see model EV10-2E, page 1.5.04

RATINGS

Operating Pressure: 210 bar
Flow: See Performance Chart
Internal Leakage: 0.25 cc/minute max. at 210 bar
Temperature: -20 to 90°C with standard Buna seals
Coil Duty Rating: Continuous from 85 % to 115 % of nominal voltage
Minimum Pull-in Voltage: 85 % of nominal at 210 bar
Filtration: Recommend 25 µm nominal or better
Fluids: Mineral-based or synthetics with lubricating properties at viscosities of 7.4 to 420 cSt
Installation: No restrictions
Cavity: CC10-2; See page 8.2.04

SYMBOL

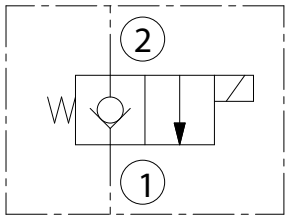

CAVITY

See page 8.2.04

TO ORDER

EV10-2B

Voltage	Seals
0 - Without coil	N - Buna N
12 - 12 V DC	V - Viton A
24 - 24 V DC	
11 - 110V RAC	
22 - 220V RAC	

Terminations DIN 43650 See page 8.1.01

PERFORMANCE (Cartridge Only)

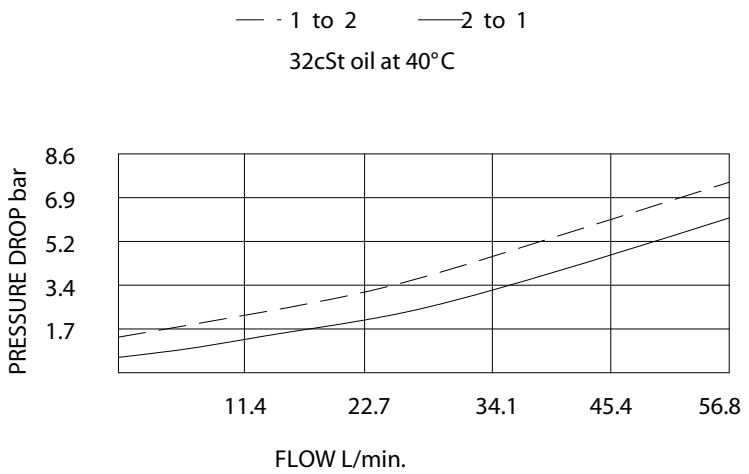

SOLENOID VALVE
EV08-2C

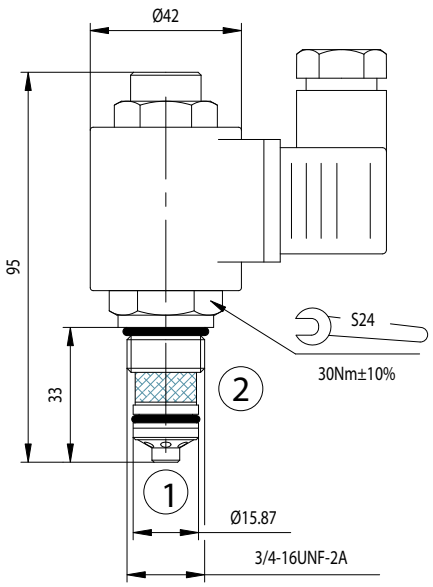

DESCRIPTION

A solenoid-operated, 2-way, normally open, piloted poppet-type, screw-in hydraulic cartridge valve, designed for low leakage in load-holding applications.

OPERATION

When de-energized, the EV08-2C allows flow from 2 to 1. Flow from 1 to 2 is always blocking.
When energized, the valve's poppet closes on its seat, blocking flow from 2 to 1.
In this mode cartridge will also blocking flow from 1 to 2.

RATINGS

Operating Pressure: 250 bar
Flow: See Performance Chart
Internal Leakage: 0.25 cc/minute max. at 250 bar
Temperature: -20 to 90°C with standard Buna seals
Coil Duty Rating: Continuous from 85 % to 115 % of nominal voltage
Minimum Pull-in Voltage: 85 % of nominal at 250 bar
Filtration: Recommend 25 µm nominal or better
Fluids: Mineral-based or synthetics with lubricating properties at viscosities of 7.4 to 420 cSt
Installation: No restrictions
Cavity: CC08-2A; See page 8.2.02

SYMBOL

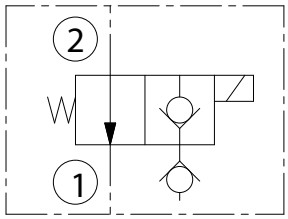

CAVITY

See page 8.2.02

TO ORDER

EV08-2C

Voltage	Seals
0 - Without coil	N - Buna N
12 - 12 V DC	V - Viton A
24 - 24 V DC	
11 - 110V RAC	
22 - 220V RAC	

Terminations DIN 43650 See page 8.1.01

PERFORMANCE (Cartridge Only)

From 2 to 1
32cSt oil at 40°C

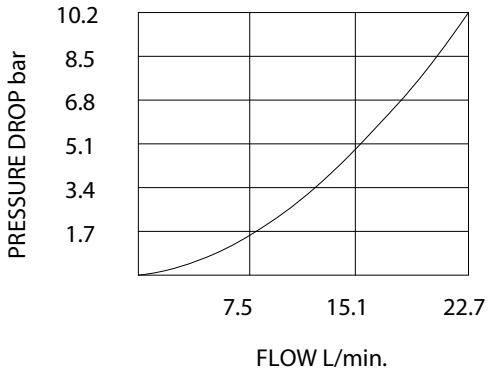

SOLENOID VALVE
EV08-2D

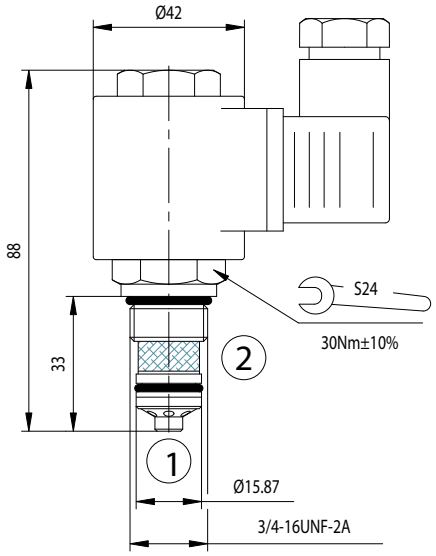

DESCRIPTION

A solenoid-operated, 2-way, normally closed, piloted poppet-type, screw-in hydraulic cartridge valve, intended to act as a blocking or load-holding device for low flow circuits.

OPERATION

When de-energized, the EV08-2D blocks flow in both directions.
When energized, the cartridge's poppet lifts to open the 2 to 1 flow path. In this mode, flow from 1 to 2 is blocked.

RATINGS

Operating Pressure: 250 bar
Flow: See Performance Chart
Internal Leakage: 0.25 cc/minute max. at 250 bar
Temperature: -20 to 90°C with standard Buna seals
Coil Duty Rating: Continuous from 85 % to 115 % of nominal voltage
Minimum Pull-in Voltage: 85 % of nominal at 250 bar
Filtration: Recommend 25 µm nominal or better
Fluids: Mineral-based or synthetics with lubricating properties at viscosities of 7.4 to 420 cSt
Installation: No restrictions
Cavity: CC08-2A; See page 8.2.02

SYMBOL

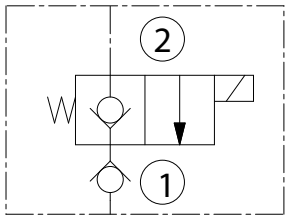

CAVITY

See page 8.2.02

TO ORDER

EV08-2D

Voltage	Seals
0 - Without coil	N - Buna N
12 - 12 V DC	V - Viton A
24 - 24 V DC	
11 - 110V RAC	
22 - 220V RAC	

Terminations DIN 43650 See page 8.1.01

PERFORMANCE (Cartridge Only)

From 2 to 1

32cSt oil at 40°C

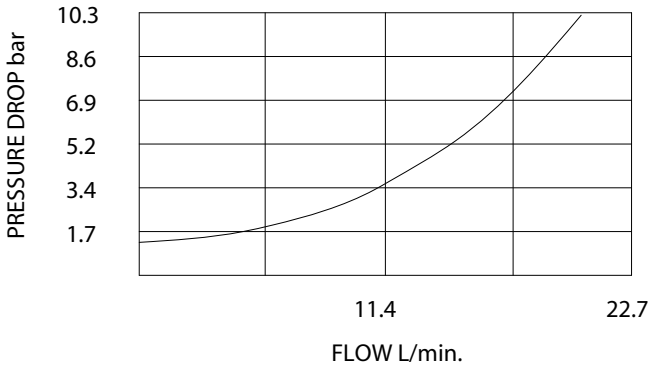

SOLENOID VALVE
EV06-2E

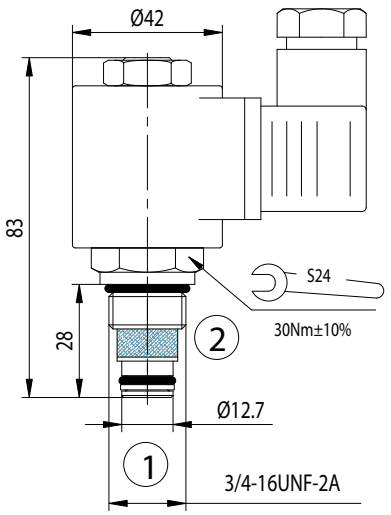

DESCRIPTION

A solenoid-operated, 2-way, normally closed, poppet-type, screw-in hydraulic cartridge valve, designed for low leakage blocking and load holding applications.

OPERATION

When de-energized, the EV06-2E acts as a check valve, allowing flow from 1 to 2, while blocking flow from 2 to 1.
When energized, the poppet lifts to open the 2 to 1 flow path. In this mode, bidirectional flow is allowed.

RATINGS

Operating Pressure: 250 bar
Flow: See Performance Chart
Internal Leakage: 0.25 cc/minute max. at 250 bar
Temperature: -20 to 90°C with standard Buna seals
Coil Duty Rating: Continuous from 85 % to 115 % of nominal voltage
Minimum Pull-in Voltage: 85 % of nominal at 250 bar
Filtration: Recommend 25 µm nominal or better
Fluids: Mineral-based or synthetics with lubricating properties at viscosities of 7.4 to 420 cSt
Installation: No restrictions
Cavity: CC06-2; See page 8.2.01

SYMBOL

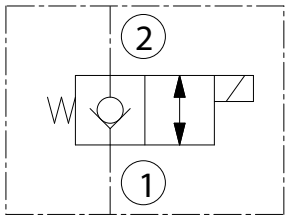

CAVITY

See page 8.2.01

TO ORDER

EV06-2E

Voltage	Seals
0 - Without coil	N - Buna N
12 - 12 V DC	V - Viton A
24 - 24 V DC	
11 - 110V RAC	
22 - 220V RAC	

Terminations DIN 43650 See page 8.1.01

PERFORMANCE(Cartridge Only)

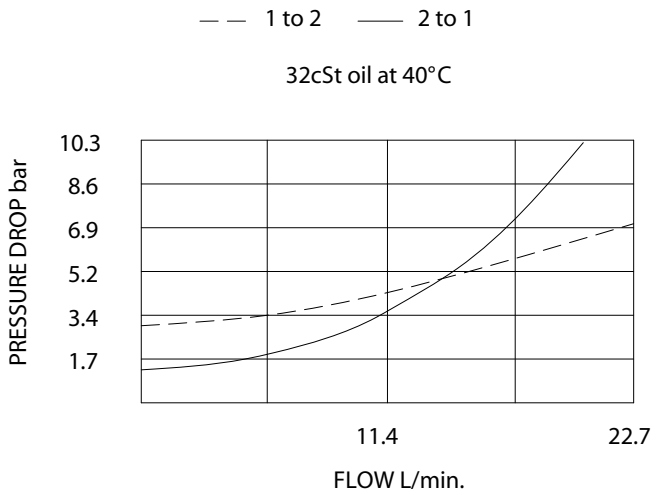

SOLENOID VALVE
EV56-2E

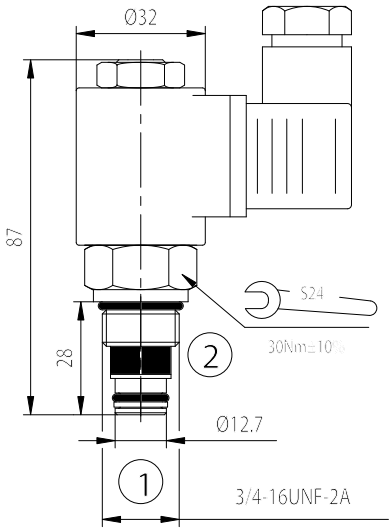

DESCRIPTION

A solenoid-operated, 2-way, normally closed, piloted poppet-type, screw-in hydraulic cartridge valve, intended to act as a blocking or load-holding device for low flow circuits.

OPERATION

When de-energized, the EV56-2E acts as a check valve, allowing flow from 1 to 2, while blocking flow from 2 to 1.
When energized, the poppet lifts to open the 2 to 1 flow path. In this mode, bidirectional flow is allowed.

RATINGS

Operating Pressure: 200 bar
Flow: See Performance Chart
Internal Leakage: 0.25 cc/minute max. at 200 bar
Temperature: -20 to 90°C with standard Buna N seals
Coil Duty Rating: Continuous from 85 % to 115 % of nominal voltage
Minimum Pull-in Voltage: 85 % of nominal at 200 bar
Filtration: Recommend 25 µm nominal or better
Fluids: Mineral-based or synthetics with lubricating properties at viscosities of 7.4 to 420 cSt
Installation: No restrictions
Cavity: CC06-2; See page 8.2.01

SYMBOL

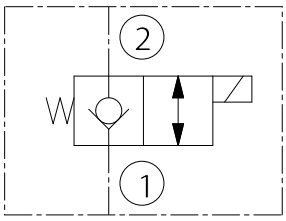

CAVITY

See page 8.2.01

TO ORDER

EV56-2E

Voltage	Seals
0 - Without coil	N - Buna N
12 - 12 V DC	V - Viton A
24 - 24 V DC	
11 - 110V RAC	
22 - 220V RAC	

Terminations DIN 43650 See page 8.1.01

PERFORMANCE (Cartridge Only)

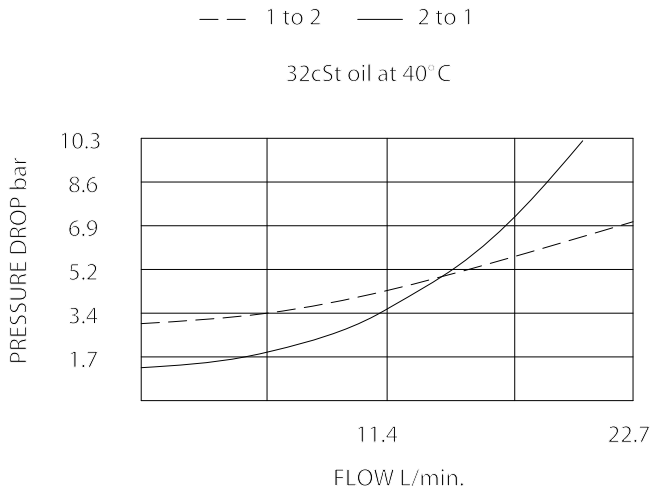

SOLENOID VALVE
EV08-2E

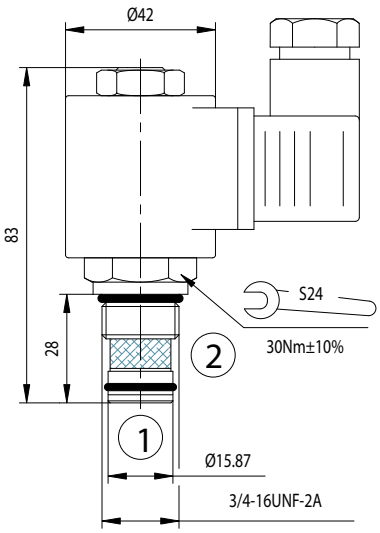

DESCRIPTION

A solenoid-operated, 2-way, normally closed, poppet-type, screw-in hydraulic cartridge valve, designed for low leakage blocking and load holding applications.

OPERATION

When de-energized, the EV08-2E acts as a check valve, allowing flow from 1 to 2, while blocking flow from 2 to 1.
When energized, the poppet lifts to open the 2 to 1 flow path. In this mode, bidirectional flow is allowed.

RATINGS

Operating Pressure: 250 bar
Flow: See Performance Chart
Internal Leakage: 0.25 cc/minute max. at 250 bar
Temperature: -20 to 90°C with standard Buna seals
Coil Duty Rating: Continuous from 85 % to 115 % of nominal voltage
Minimum Pull-in Voltage: 85 % of nominal at 250 bar
Filtration: Recommend 25 µm nominal or better
Fluids: Mineral-based or synthetics with lubricating properties at viscosities of 7.4 to 420 cSt
Installation: No restrictions
Cavity: CC08-2; See page 8.2.01

SYMBOL

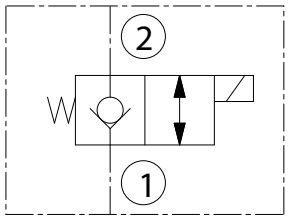

CAVITY

See page 8.2.01

TO ORDER

EV08-2E

Voltage	Seals
0 - Without coil	N - Buna N
12 - 12 V DC	V - Viton A
24 - 24 V DC	
11 - 110V RAC	
22 - 220V RAC	

Terminations DIN 43650 See page 8.1.01

PERFORMANCE (Cartridge Only)

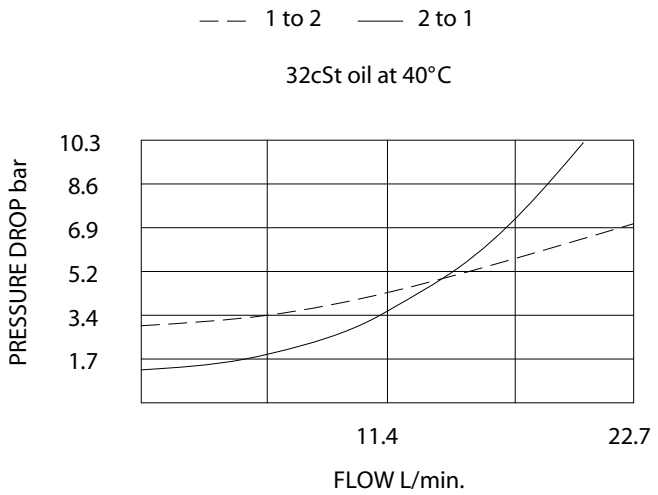

SOLENOID VALVE
EV10-2E

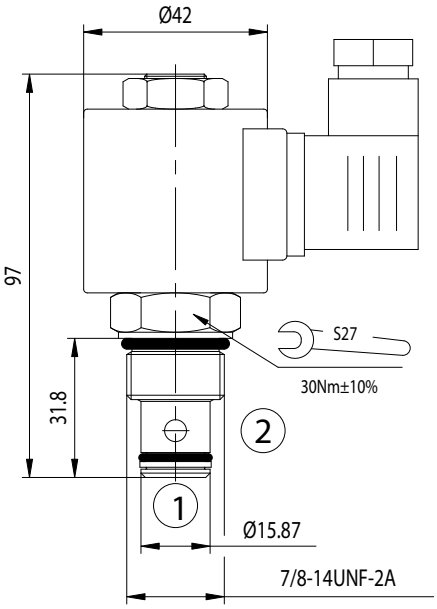

DESCRIPTION

A solenoid-operated, 2-way, normally closed, poppet-type, screw-in hydraulic cartridge valve, designed for low leakage blocking and load holding applications.

OPERATION

When de-energized, the EV10-2E acts as a check valve, allowing flow to pass from 1 to 2, while blocking flow from 2 to 1.
When energized, the poppet lifts to open the 2 to 1 flow path. In this mode, flow is also allowed from 1 to 2.

RATINGS

Operating Pressure: 210 bar
Flow: See Performance Chart
Internal Leakage: 0.25 cc/minute max. at 210 bar
Temperature: -20 to 90°C with standard Buna seals
Coil Duty Rating: Continuous from 85 % to 115 % of nominal voltage
Minimum Pull-in Voltage: 85 % of nominal at 210 bar
Filtration: Recommend 25 µm nominal or better
Fluids: Mineral-based or synthetics with lubricating properties at viscosities of 7.4 to 420 cSt
Installation: No restrictions
Cavity: CC10-2; See page 8.2.04

SYMBOL

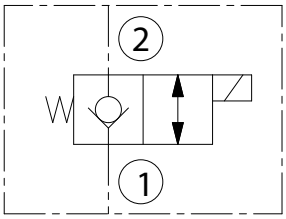

CAVITY

See page 8.2.04

TO ORDER

EV10-2E

Voltage	Seals
0 - Without coil	N - Buna N
12 - 12 V DC	V - Viton A
24 - 24 V DC	
11 - 110V RAC	
22 - 220V RAC	

Terminations DIN 43650 See page 8.1.01

PERFORMANCE (Cartridge Only)

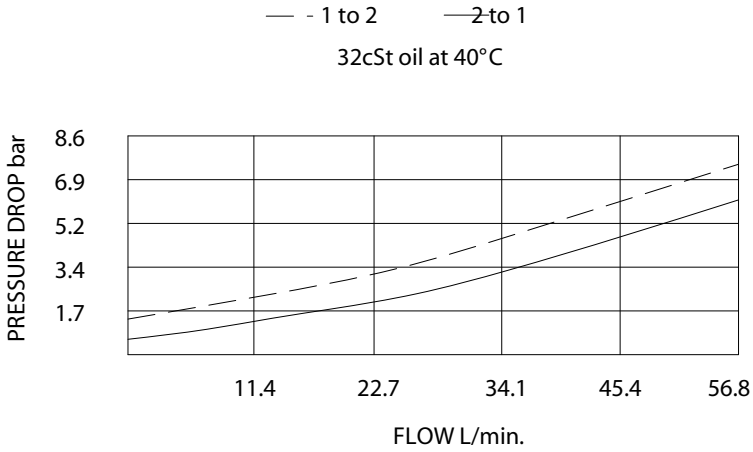

SOLENOID VALVE
EV06-2F

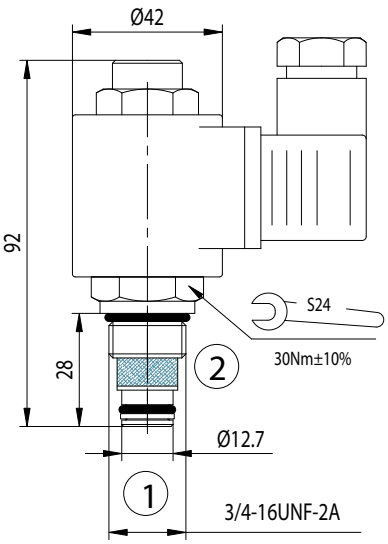

DESCRIPTION

A solenoid-operated, 2-way, normally open, poppet-type, screw-in hydraulic cartridge valve, designed to function as a load holding or blocking valve in applications requiring low internal leakage at high pressure.

OPERATION

When de-energized, the EV06-2F poppet lifts to open flow from 2 to 1. Flow is also open from 1 to 2.
When energized, the cartridge acts as a check valve, allowing flow from 1 to 2, while blocking flow from 2 to 1.

RATINGS

Operating Pressure: 250 bar
Flow: See Performance Chart
Internal Leakage: 0.25 cc/minute max. at 250 bar
Temperature: -20 to 90°C with standard Buna seals
Coil Duty Rating: Continuous from 85 % to 115 % of nominal voltage
Minimum Pull-in Voltage: 85 % of nominal at 250 bar
Filtration: Recommend 5 µm nominal or better
Fluids: Mineral-based or synthetics with lubricating properties at viscosities of 7.4 to 420 cSt
Installation: No restrictions
Cavity: CC06-2; See page 8.2.01

SYMBOL

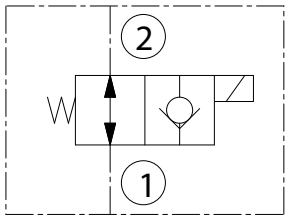

CAVITY

See page 8.2.01

TO ORDER

EV06-2F

Voltage	Seals
0 - Without coil	N - Buna N
12 - 12 V DC	V - Viton A
24 - 24 V DC	
11 - 110V RAC	
22 - 220V RAC	

Terminations DIN 43650 See page 8.1.01

PERFORMANCE (Cartridge Only)

From 2 to 1
32cSt oil at 40°C

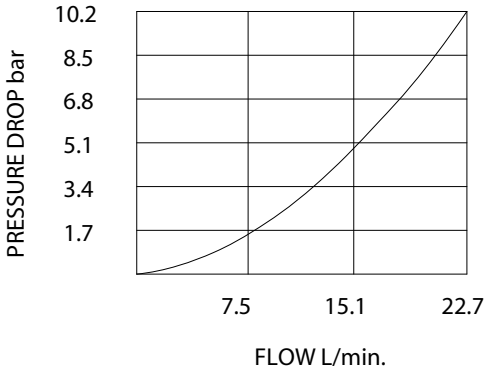

SOLENOID VALVE
EV08-2F

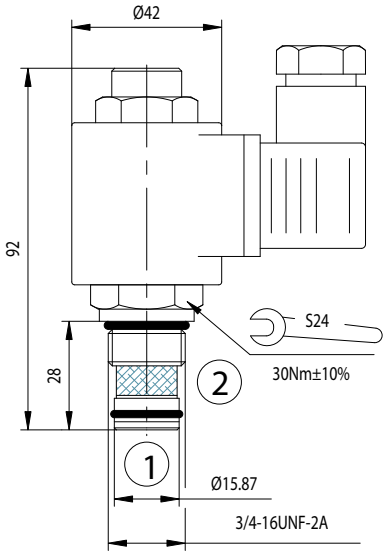

DESCRIPTION

A solenoid-operated, 2-way, normally open, poppet-type, screw-in hydraulic cartridge valve, designed to function as a load holding or blocking valve in applications requiring low internal leakage at high pressure.

OPERATION

When de-energized, the EV08-2F poppet lifts to open flow from 2 to 1. Flow is also open from 1 to 2.
When energized, the cartridge acts as a check valve, allowing flow from 1 to 2, while blocking flow from 2 to 1.

RATINGS

Operating Pressure: 250 bar
Flow: See Performance Chart
Internal Leakage: 0.25 cc/minute max. at 250 bar
Temperature: -20 to 90°C with standard Buna seals
Coil Duty Rating: Continuous from 85 % to 115 % of nominal voltage
Minimum Pull-in Voltage: 85 % of nominal at 250 bar
Filtration: Recommend 5 µm nominal or better
Fluids: Mineral-based or synthetics with lubricating properties at viscosities of 7.4 to 420 cSt
Installation: No restrictions
Cavity: CC08-2; See page 8.2.01

SYMBOL

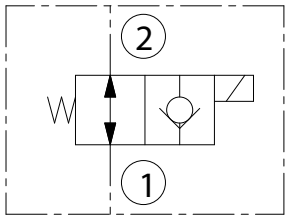

CAVITY

See page 8.2.01

TO ORDER

EV08-2F

Voltage	Seals
0 - Without coil	N - Buna N
12 - 12 V DC	V - Viton A
24 - 24 V DC	
11 - 110V RAC	
22 - 220V RAC	

Terminations DIN 43650 See page 8.1.01

PERFORMANCE (Cartridge Only)

From 2 to 1

32cSt oil at 40°C

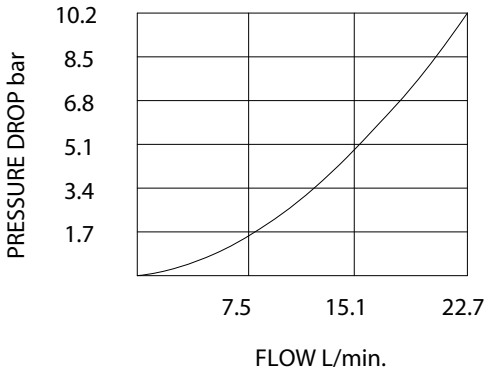

SOLENOID VALVE
EV10-2F

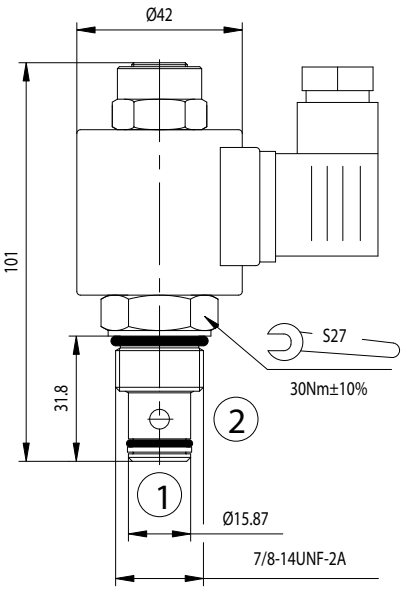

DESCRIPTION

A solenoid-operated, 2-way, poppet-type, normally open, screw-in, hydraulic cartridge valve.

OPERATION

When de-energized, the EV10-2F allows bidirectional flow from 2 to 1.
When energized, the valve's poppet closes to block flow from 2 to 1. In this mode, the cartridge allows free reverse flow from 1 to 2 after overcoming the solenoid force

RATINGS

Operating Pressure: 210 bar
Flow: See Performance Chart
Internal Leakage: 0.25 cc/minute max. at 210 bar
Temperature: -20 to 90°C with standard Buna seals
Coil Duty Rating: Continuous from 85 % to 115 % of nominal voltage
Minimum Pull-in Voltage: 85 % of nominal at 210 bar
Filtration: Recommend 25 µm nominal or better
Fluids: Mineral-based or synthetics with lubricating properties at viscosities of 7.4 to 420 cSt
Installation: No restrictions
Cavity: CC10-2; See page 8.2.04

SYMBOL

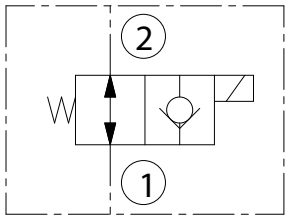

CAVITY

See page 8.2.04

TO ORDER

EV10-2F

Voltage	Seals
0 - Without coil	N - Buna N
12 - 12 V DC	V - Viton A
24 - 24 V DC	
11 - 110V RAC	
22 - 220V RAC	

Terminations DIN 43650 See page 8.1.01

PERFORMANCE (Cartridge Only)

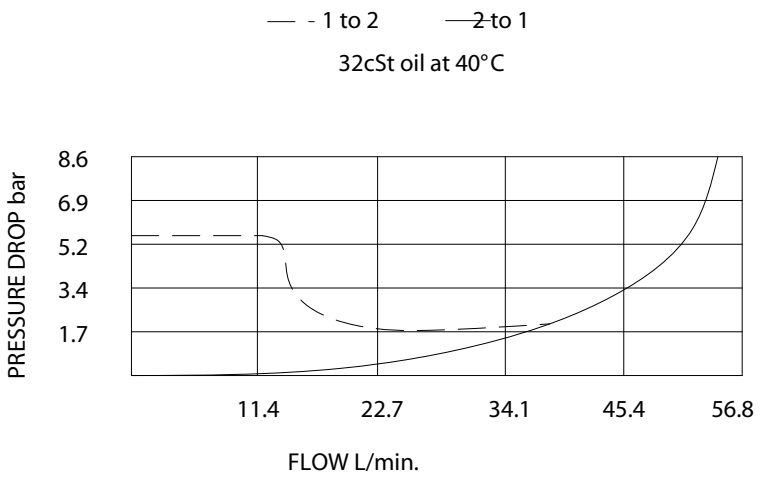

SOLENOID VALVE
EV06-2K

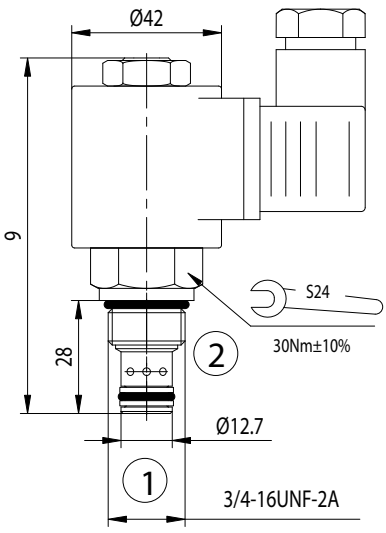

DESCRIPTION

A solenoid-operated, 2-way, normally open, direct-acting, spool-type, screw-in hydraulic cartridge valve designed to function as a bidirectional blocking valve in low flow circuits.

OPERATION

When de-energized, the EV06-2K allows flow in both directions.
When energized, the valve's spool shifts to close bidirectionally.

RATINGS

Operating Pressure: 250 bar
Flow: 8 L/min max.
Internal Leakage: 82 cc/minute max. at 250 bar
Temperature: -20 to 90°C with standard Buna seals
Coil Duty Rating: Continuous from 85 % to 115 % of nominal voltage
Minimum Pull-in Voltage: 85 % of nominal at 250 bar
Filtration: Recommend 10 µm nominal
Fluids: Mineral-based or synthetics with lubricating properties at viscosities of 7.4 to 420 cSt
Installation: No restrictions
Cavity: CC06-2; See page 8.2.01

SYMBOL

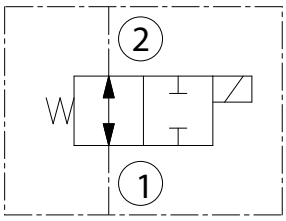

CAVITY

See page 8.2.01

TO ORDER

EV06-2K

Voltage	Seals
0 - Without coil	N - Buna N
12 - 12 V DC	V - Viton A
24 - 24 V DC	
11 - 110V RAC	
22 - 220V RAC	

Terminations DIN 43650 See page 8.1.01

PERFORMANCE (Cartridge Only)

De-energized
32 cSt oil at 40°C

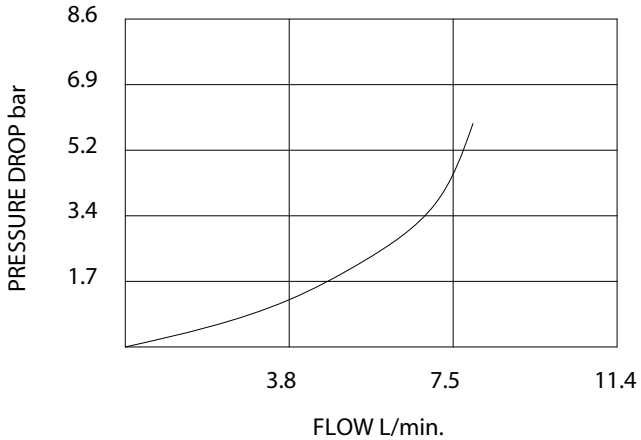

SOLENOID VALVE
EV56-2K

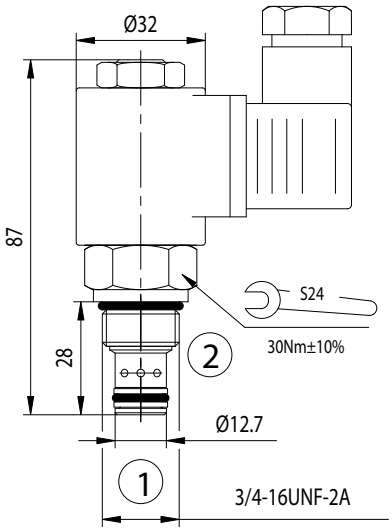

DESCRIPTION

A solenoid-operated, 2-way, normally open, direct-acting, spool-type, screw-in hydraulic cartridge valve designed to function as a bidirectional blocking valve in low flow circuits.

OPERATION

When de-energized, the EV56-2K allows flow in both directions.
When energized, the valve's spool shifts to close bidirectionally.

RATINGS

Operating Pressure: 200 bar
Flow: 8l/min max
Internal Leakage: 82 cc/minute max. at 200 bar
Temperature: -20 to 90°C with standard Buna N seals
Coil Duty Rating: Continuous from 85 % to 115 % of nominal voltage
Minimum Pull-in Voltage: 85 % of nominal at 200 bar
Filtration: Recommend 10 µm nominal or better
Fluids: Mineral-based or synthetics with lubricating properties at viscosities of 7.4 to 420 cSt
Installation: No restrictions
Cavity: CC06-2; See page 8.2.01

SYMBOL

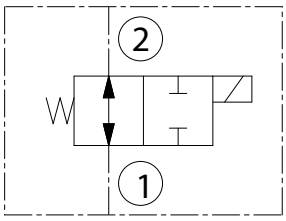

CAVITY

See page 8.2.01

TO ORDER

EV56-2E

Voltage	Seals
0 - Without coil	N - Buna N
12 - 12 V DC	V - Viton A
24 - 24 V DC	
11 - 110V RAC	
22 - 220V RAC	

Terminations DIN 43650 See page 8.1.01

PERFORMANCE (Cartridge Only)

De-energized
32 cSt oil at 40°C

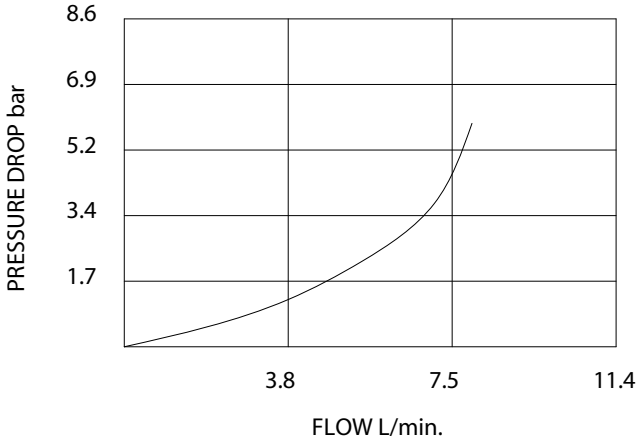

SOLENOID VALVE
EV08-2K

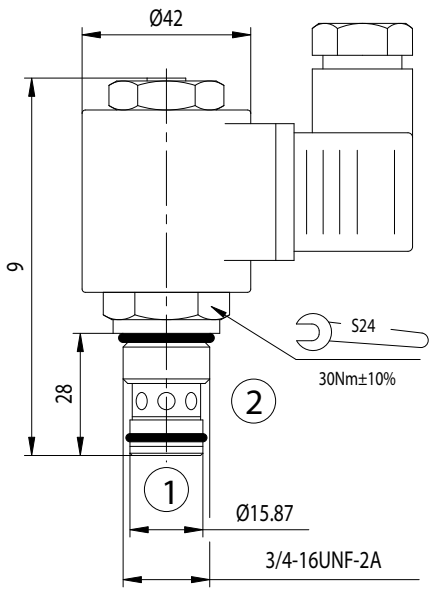

DESCRIPTION

A solenoid-operated, 2-way, normally open, direct-acting, spool-type, screw-in hydraulic cartridge valve designed to function as a bidirectional blocking valve in low flow circuits.

OPERATION

When de-energized, the EV08-2K allows flow in both directions.
When energized, the valve's spool shifts to close bidirectionally.

RATINGS

Operating Pressure: 250 bar
Flow: 8 L/min max.
Internal Leakage: 82 cc/minute max. at 250 bar
Temperature: -20 to 90°C with standard Buna seals
Coil Duty Rating: Continuous from 85 % to 115 % of nominal voltage
Minimum Pull-in Voltage: 85 % of nominal at 250 bar
Filtration: Recommend 10 µm nominal
Fluids: Mineral-based or synthetics with lubricating properties at viscosities of 7.4 to 420 cSt
Installation: No restrictions
Cavity: CC08-2; See page 8.2.01

SYMBOL

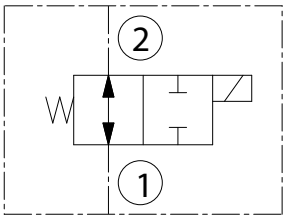

CAVITY

See page 8.2.01

TO ORDER

EV08-2K

Voltage	Seals
0 - Without coil	N - Buna N
12 - 12 V DC	V - Viton A
24 - 24 V DC	
11 - 110V RAC	
22 - 220V RAC	

Terminations DIN 43650 See page 8.1.01

PERFORMANCE (Cartridge Only)

De-energized
32 cSt oil at 40°C

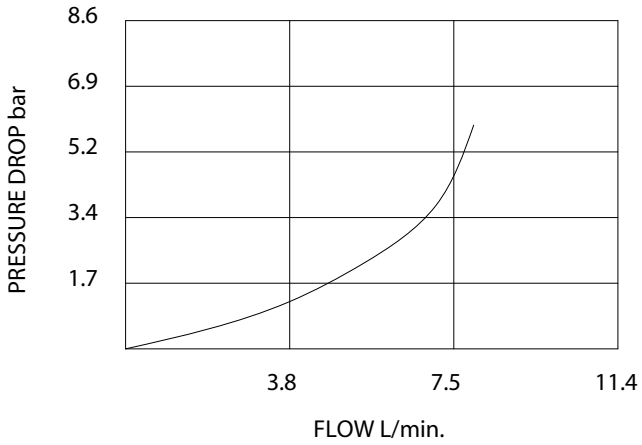

SOLENOID VALVE
EV10-2K

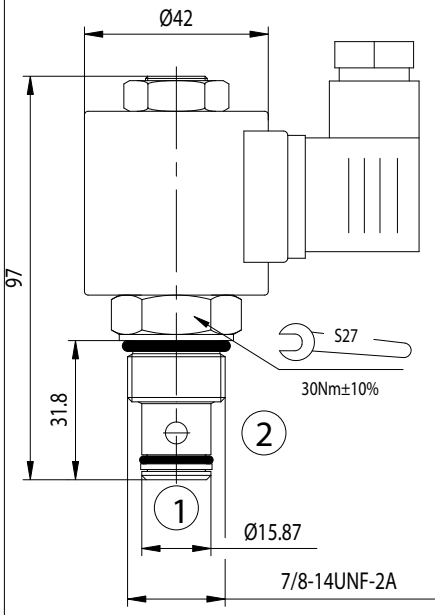

DESCRIPTION

A solenoid-operated, 2-way, normally open, direct-acting, spool-type, screw-in hydraulic cartridge valve, designed to function as a bidirectional blocking valve.

OPERATION

When de-energized, the EV10-2K allows flow in both directions.
When energized, the cartridge's spool shifts to close the bidirectional flow path.

RATINGS

Operating Pressure: 210 bar
Flow: See Performance Chart
Internal Leakage: 80 cc/minute max. at 210 bar
Temperature: -20 to 90°C with standard Buna seals
Coil Duty Rating: Continuous from 85 % to 115 % of nominal voltage
Minimum Pull-in Voltage: 85 % of nominal at 210 bar
Filtration: Recommend 25 µm nominal or better
Fluids: Mineral-based or synthetics with lubricating properties at viscosities of 7.4 to 420 cSt
Installation: No restrictions
Cavity: CC10-2; See page 8.2.04

SYMBOL

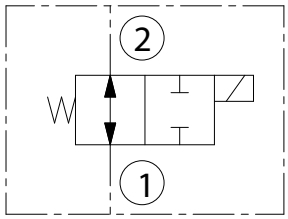

CAVITY

See page 8.2.04

TO ORDER

EV10-2K

Voltage	Seals
0 - Without coil	N - Buna N
12 - 12 V DC	V - Viton A
24 - 24 V DC	
11 - 110V RAC	
22 - 220V RAC	

Terminations DIN 43650 See page 8.1.01

PERFORMANCE (Cartridge Only)

De-energized
32cSt oil at 40°C

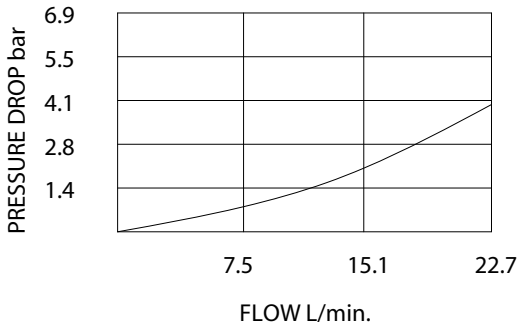

SOLENOID VALVE
EV06-2L

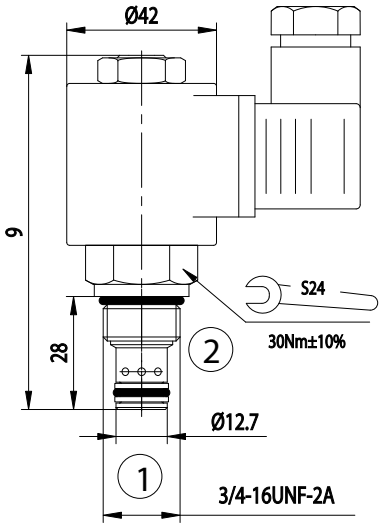

DESCRIPTION

A solenoid-operated, 2-way, normally closed, direct-acting, spool-type, screw-in hydraulic cartridge valve, designed to operate as a bidirectional blocking valve in low flow circuits.

OPERATION

When de-energized, the EV06-2L blocks flow in both directions.
When energized, the cartridge's spool shifts to open the bidirectional flow path.

RATINGS

Operating Pressure: 250 bar
Flow: 10 L/min max.
Internal Leakage: 82 cc/minute max. at 250 bar
Temperature: -20 to 90°C with standard Buna seals
Coil Duty Rating: Continuous from 85 % to 115 % of nominal voltage
Minimum Pull-in Voltage: 85 % of nominal at 250 bar
Filtration: Recommend 10 µm nominal
Fluids: Mineral-based or synthetics with lubricating properties at viscosities of 7.4 to 420 cSt
Installation: No restrictions
Cavity: CC06-2; See page 8.2.01

SYMBOL

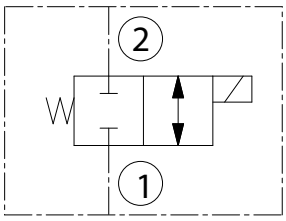

CAVITY

See page 8.2.01

TO ORDER

EV06-2L

Voltage	Seals
0 - Without coil	N - Buna N
12 - 12 V DC	V - Viton A
24 - 24 V DC	
11 - 110V RAC	
22 - 220V RAC	

Terminations DIN 43650 See page 8.1.01

PERFORMANCE (Cartridge Only)

Energized

32 cSt oil at 40°C

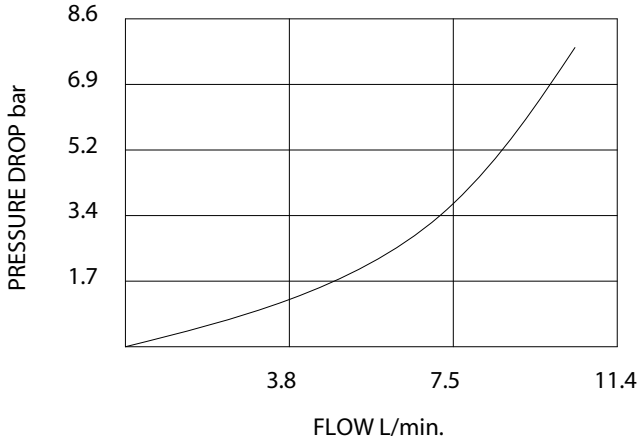

SOLENOID VALVE
EV56-2L

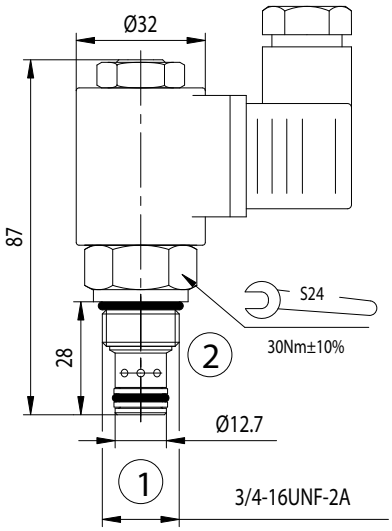

DESCRIPTION

A solenoid-operated, 2-way, normally closed, direct-acting, spool-type, screw-in hydraulic cartridge valve, designed to operate as a bidirectional blocking valve in low flow circuits.

OPERATION

When de-energized, the EV56-2L blocks flow in both directions.
When energized, the cartridge's spool shifts to open the bidirectional flow path.

RATINGS

Operating Pressure: 200 bar
Flow: 10 L/min max
Internal Leakage: 82 cc/minute max. at 200 bar
Temperature: -20 to 90°C with standard Buna N seals
Coil Duty Rating: Continuous from 85 % to 115 % of nominal voltage
Minimum Pull-in Voltage: 85 % of nominal at 200 bar
Filtration: Recommend 10 µm nominal or better
Fluids: Mineral-based or synthetics with lubricating properties at viscosities of 7.4 to 420 cSt
Installation: No restrictions
Cavity: CC06-2; See page 8.2.01

SYMBOL

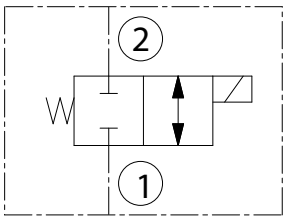

CAVITY

See page 8.2.01

TO ORDER

EV56-2L

Voltage	Seals
0 - Without coil	N - Buna N
12 - 12 V DC	V - Viton A
24 - 24 V DC	
11 - 110V RAC	
22 - 220V RAC	

Terminations DIN 43650 See page 8.1.01

PERFORMANCE (Cartridge Only)

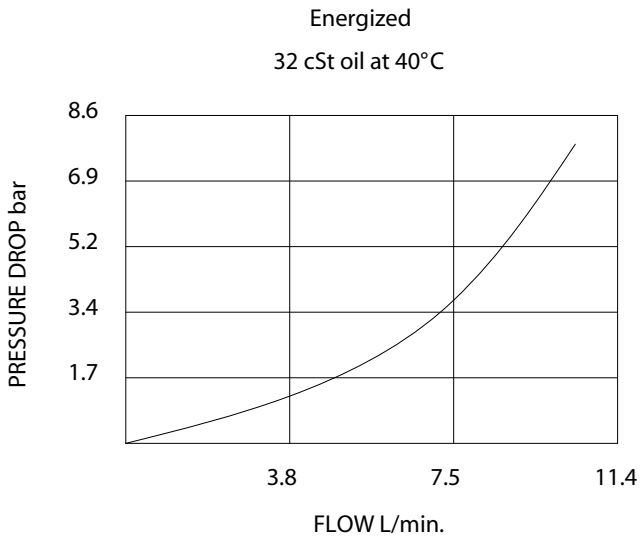

SOLENOID VALVE
EV08-2L

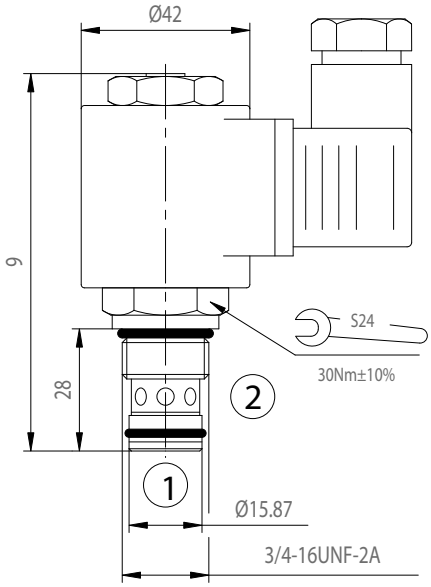

DESCRIPTION

A solenoid-operated, 2-way, normally closed, direct-acting, spool-type, screw-in hydraulic cartridge valve, designed to operate as a bidirectional blocking valve in low flow circuits.

OPERATION

When de-energized, the EV08-2L blocks flow in both directions.
When energized, the cartridge's spool shifts to open the bidirectional flow path.

RATINGS

Operating Pressure: 250 bar
Flow: 10 L/min max.
Internal Leakage: 82 cc/minute max. at 250 bar
Temperature: -20 to 90°C with standard Buna seals
Coil Duty Rating: Continuous from 85 % to 115 % of nominal voltage
Minimum Pull-in Voltage: 85 % of nominal at 250 bar
Filtration: Recommend 10 µm nominal
Fluids: Mineral-based or synthetics with lubricating properties at viscosities of 7.4 to 420 cSt
Installation: No restrictions
Cavity: CC08-2; See page 8.2.01

SYMBOL

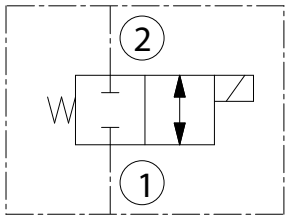

CAVITY

See page 8.2.01

TO ORDER

EV08-2L

Voltage	Seals
0 - Without coil	N - Buna N
12 - 12 V DC	V - Viton A
24 - 24 V DC	
11 - 110V RAC	
22 - 220V RAC	

Terminations DIN 43650 See page 8.1.01

PERFORMANCE (Cartridge Only)

Energized

32 cSt oil at 40°C

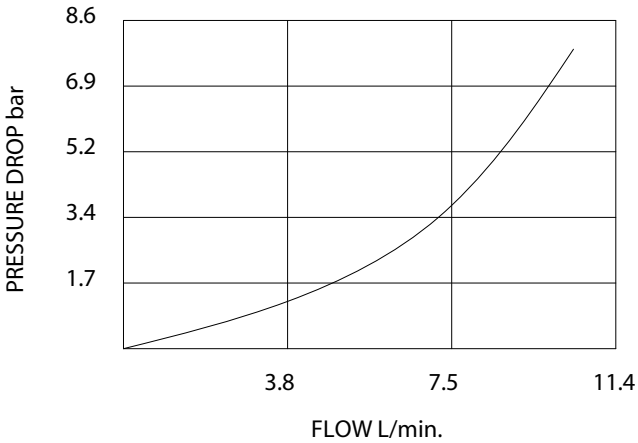

SOLENOID VALVE
EV10-2L

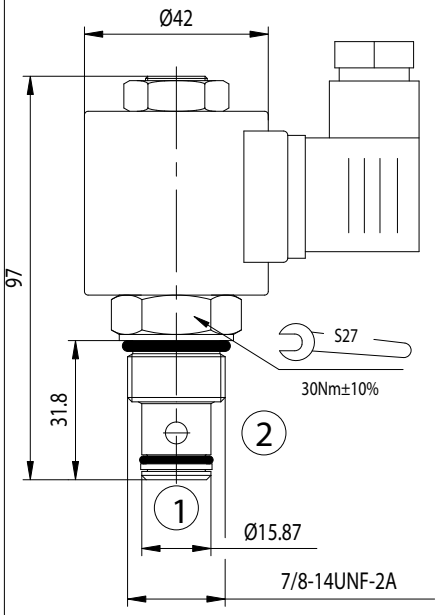

DESCRIPTION

A solenoid-operated, 2-way, normally closed, direct-acting, spool-type, screw-in hydraulic cartridge valve, designed to operate as a bidirectional blocking valve.

OPERATION

When de-energized, the EV10-2L blocks flow in both directions.
When energized, the cartridge's spool shifts to open the bidirectional flow path.

RATINGS

Operating Pressure: 210 bar
Flow: See Performance Chart
Internal Leakage: 80 cc/minute max. at 210 bar
Temperature: -20 to 90°C with standard Buna seals
Coil Duty Rating: Continuous from 85 % to 115 % of nominal voltage
Minimum Pull-in Voltage: 85 % of nominal at 210 bar
Filtration: Recommend 25 µm nominal or better
Fluids: Mineral-based or synthetics with lubricating properties at viscosities of 7.4 to 420 cSt
Installation: No restrictions
Cavity: CC10-2; See page 8.2.04

SYMBOL

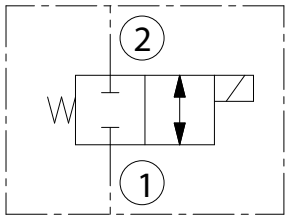

CAVITY

See page 8.2.04

TO ORDER

EV10-2L

Voltage	Seals
0 - Without coil	N - Buna N
12 - 12 V DC	V - Viton A
24 - 24 V DC	
11 - 110V RAC	
22 - 220V RAC	

Terminations DIN 43650 See page 8.1.01

PERFORMANCE (Cartridge Only)

Energized
32cSt oil at 40°C

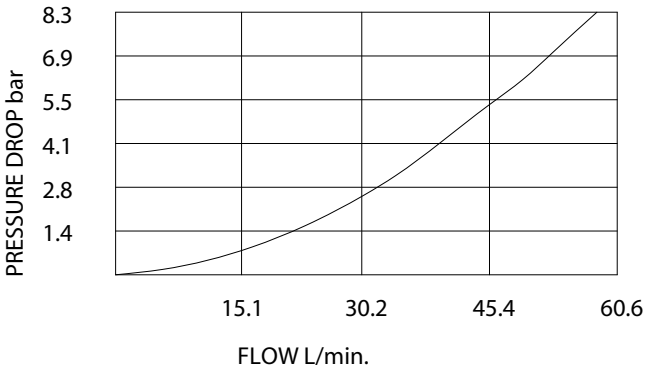

SOLENOID VALVE
EV08-3A

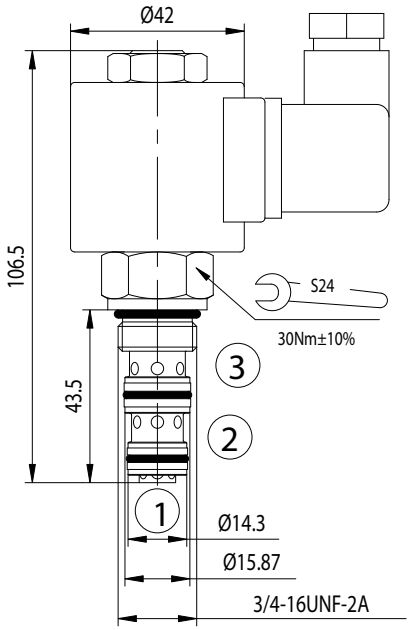

DESCRIPTION

A solenoid-operated, 3-way, direct-acting, spool-type, screw-in hydraulic cartridge valve.

OPERATION

When de-energized, the EV08-3A allows flow from 2 to 1, while blocking flow at 3.
When energized, the cartridge's spool shifts to open from 2 to 3, while blocking at 1.

RATINGS

Operating Pressure: 210 bar
Flow: 8 L/min. max.
Internal Leakage: 82 cc/minute max. at 210 bar
Temperature: -20 to 90°C with standard Buna seals
Coil Duty Rating: Continuous from 85 % to 115 % of nominal voltage
Minimum Pull-in Voltage: 85 % of nominal at 210 bar
Filtration: Recommend 10 µm nominal or better
Fluids: Mineral-based or synthetics with lubricating properties at viscosities of 7.4 to 420 cSt
Installation: No restrictions
Cavity: CC08-3A; See page 8.2.02

SYMBOL

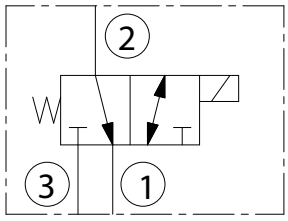

CAVITY

See page 8.2.02

TO ORDER

EV08-3A

Voltage	Seals
0 - Without coil	N - Buna N
12 - 12 V DC	V - Viton A
24 - 24 V DC	
11 - 110V RAC	
22 - 220V RAC	

Terminations DIN 43650 See page 8.1.01

PERFORMANCE (Cartridge Only)

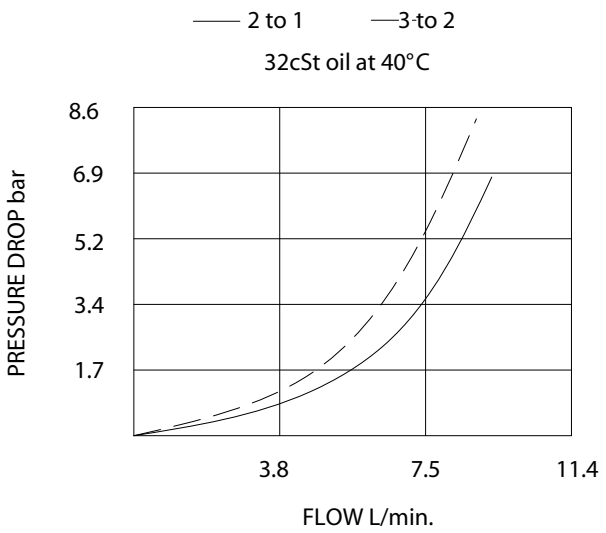

SOLENOID VALVE
EV58-3A

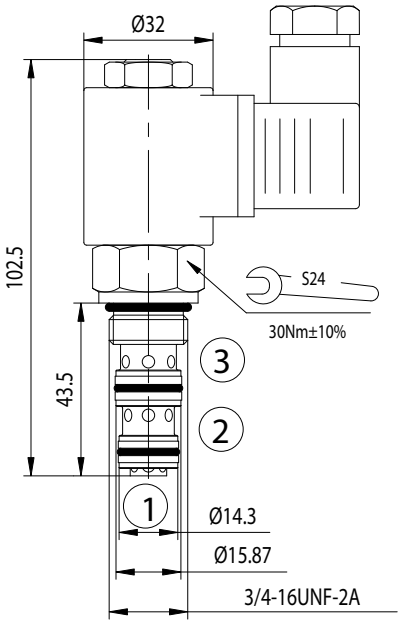

DESCRIPTION

A solenoid-operated, 3-way, direct-acting, spool-type, screw-in hydraulic cartridge valve.

OPERATION

When de-energized, the EV58-3A allows flow from 2 to 1, while blocking flow at 3.
When energized, the cartridge's spool shifts to open from 2 to 3, while blocking at 1.

RATINGS

Operating Pressure: 210 bar
Flow: 8 L/min. max.
Internal Leakage: 82 cc/minute max. at 210 bar
Temperature: -20 to 90°C with standard Buna seals
Coil Duty Rating: Continuous from 85 % to 115 % of nominal voltage
Minimum Pull-in Voltage: 85 % of nominal at 210 bar
Filtration: Recommend 10 µm nominal or better
Fluids: Mineral-based or synthetics with lubricating properties at viscosities of 7.4 to 420 cSt
Installation: No restrictions
Cavity: CC08-3A; See page 8.2.03

SYMBOL

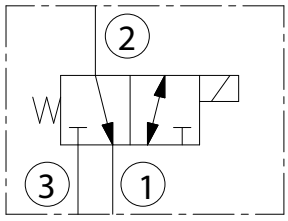

CAVITY

See page 8.2.03

TO ORDER

EV58-3A

Voltage	Seals
0 - Without coil	N - Buna N
12 - 12 V DC	V - Viton A
24 - 24 V DC	
11 - 110V RAC	
22 - 220V RAC	

Terminations DIN 43650 See page 8.1.01

PERFORMANCE (Cartridge Only)

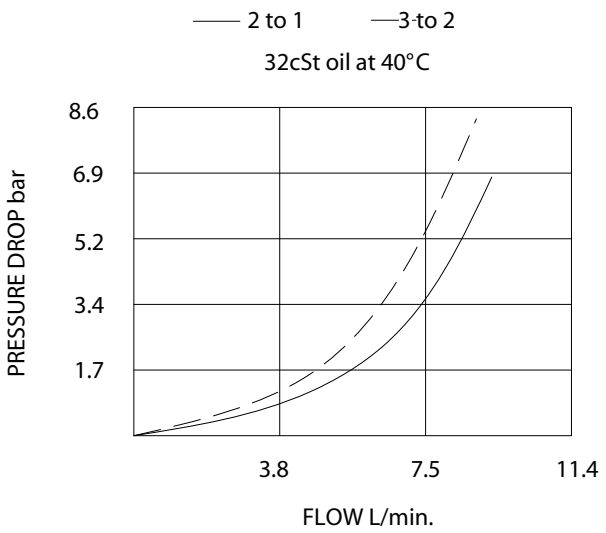

SOLENOID VALVE
EV10-3A

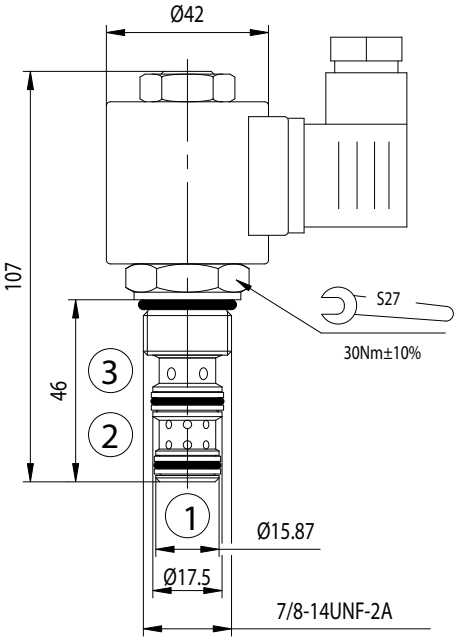

DESCRIPTION

A solenoid-operated, 3-way, direct-acting, spool-type, screw-in hydraulic cartridge valve.

OPERATION

When de-energized, the EV10-3A allows flow from 2 to 1, while blocking flow at 3.
When energized, the cartridge's spool shifts to open from 2 to 3, while blocking at 1.

RATINGS

Operating Pressure: 210 bar
Flow: 23L/min. max.
Internal Leakage: 110 cc/minute max. at 210 bar
Temperature: -20 to 90°C with standard Buna seals
Coil Duty Rating: Continuous from 85 % to 115 % of nominal voltage
Minimum Pull-in Voltage: 85 % of nominal at 210 bar
Filtration: Recommend 10 µm nominal or better
Fluids: Mineral-based or synthetics with lubricating properties at viscosities of 7.4 to 420 cSt
Installation: No restrictions
Cavity: CC10-3; See page 8.2.04

SYMBOL

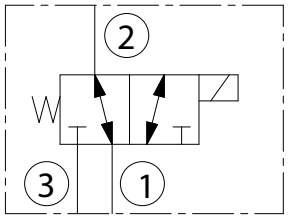

CAVITY

See page 8.2.04

PERFORMANCE (Cartridge Only)

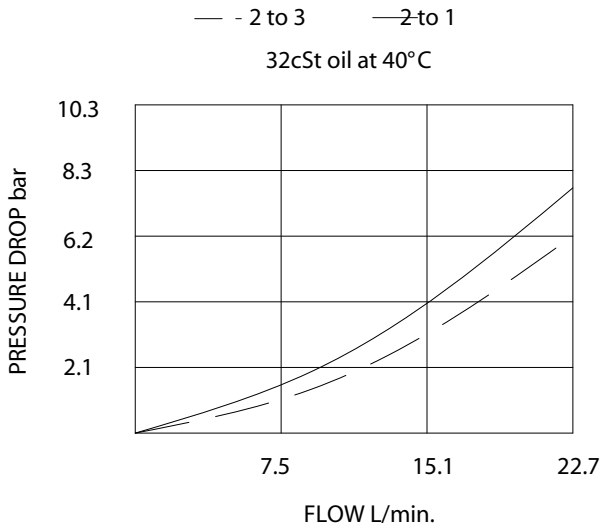

TO ORDER

EV10-3A

Voltage	Seals
0 - Without coil	N - Buna N
12 - 12 V DC	V - Viton A
24 - 24 V DC	
11 - 110V RAC	
22 - 220V RAC	

Terminations DIN 43650 See page 8.1.01

SOLENOID VALVE
EV08-3C

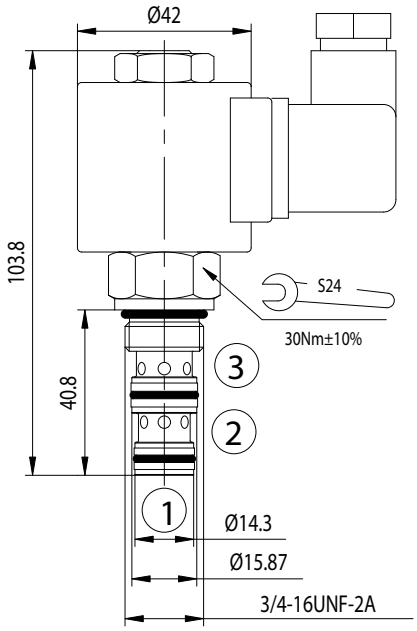

DESCRIPTION

A solenoid-operated, 3-way, direct-acting, spool-type, screw-in hydraulic cartridge valve.

OPERATION

When de-energized, the EV08-3C allows flow from 2 to 1, while blocking flow at 3.
When energized, the cartridge's spool shifts to open from 1 to 3, while blocking at 2.

RATINGS

Operating Pressure: 210 bar
Flow: 8 L/min. max.
Internal Leakage: 82 cc/minute max. at 210 bar
Temperature: -20 to 90°C with standard Buna seals
Coil Duty Rating: Continuous from 85 % to 115 % of nominal voltage
Minimum Pull-in Voltage: 85 % of nominal at 210 bar
Filtration: Recommend 10 µm nominal or better
Fluids: Mineral-based or synthetics with lubricating properties at viscosities of 7.4 to 420 cSt
Installation: No restrictions
Cavity: CC08-3; See page 8.2.03

SYMBOL

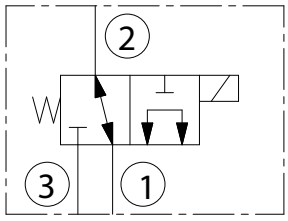

CAVITY

See page 8.2.03

TO ORDER

EV08-3C

Voltage	Seals
0 - Without coil	N - Buna N
12 - 12 V DC	V - Viton A
24 - 24 V DC	
11 - 110V RAC	
22 - 220V RAC	

Terminations DIN 43650 See page 8.1.01

PERFORMANCE (Cartridge Only)

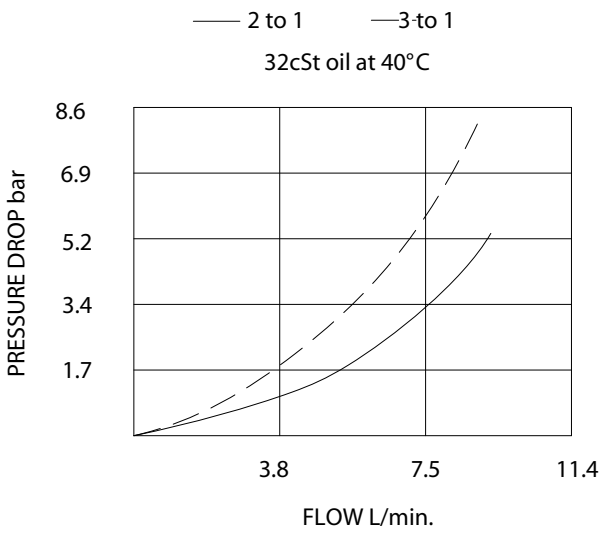

SOLENOID VALVE
EV58-3C

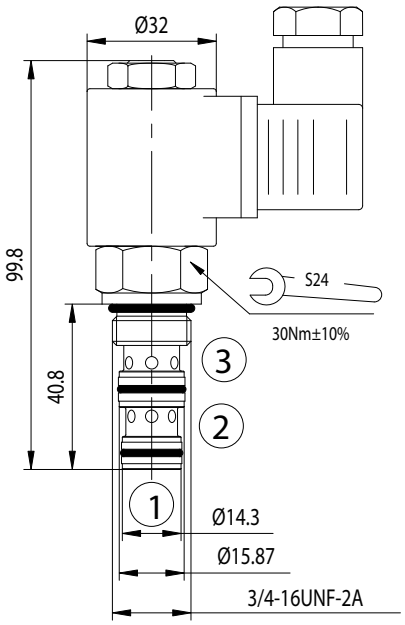

DESCRIPTION

A solenoid-operated, 3-way, direct-acting, spool-type, screw-in hydraulic cartridge valve.

OPERATION

When de-energized, the EV58-3C allows flow from 2 to 1, while blocking flow at 3.
When energized, the cartridge's spool shifts to open from 1 to 3, while blocking at 2.

RATINGS

Operating Pressure: 210 bar
Flow: 8 L/min. max.
Internal Leakage: 82 cc/minute max. at 210 bar
Temperature: -20 to 90°C with standard Buna seals
Coil Duty Rating: Continuous from 85 % to 115 % of nominal voltage
Minimum Pull-in Voltage: 85 % of nominal at 210 bar
Filtration: Recommend 10 µm nominal or better
Fluids: Mineral-based or synthetics with lubricating properties at viscosities of 7.4 to 420 cSt
Installation: No restrictions
Cavity: CC08-3; See page 8.2.03

SYMBOL

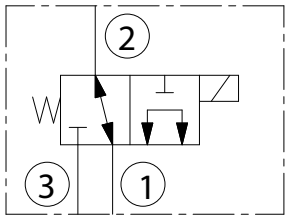

CAVITY

See page 8.2.03

TO ORDER

EV58-3C

Voltage	Seals
0 - Without coil	N - Buna N
12 - 12 V DC	V - Viton A
24 - 24 V DC	
11 - 110V RAC	
22 - 220V RAC	

Terminations DIN 43650 See page 8.1.01

PERFORMANCE (Cartridge Only)

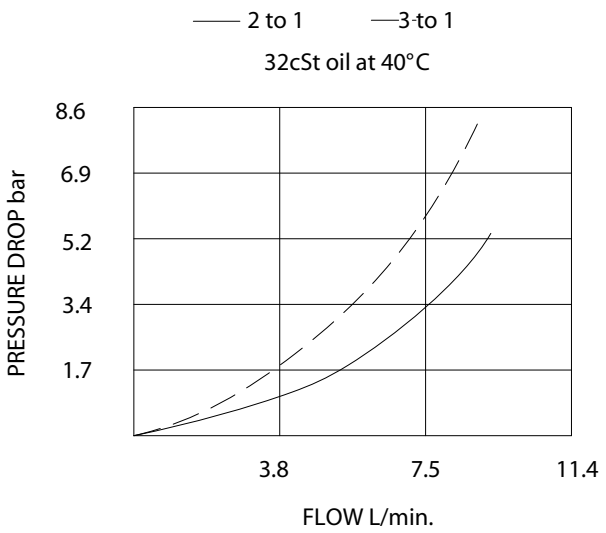

SOLENOID VALVE
EV10-3C

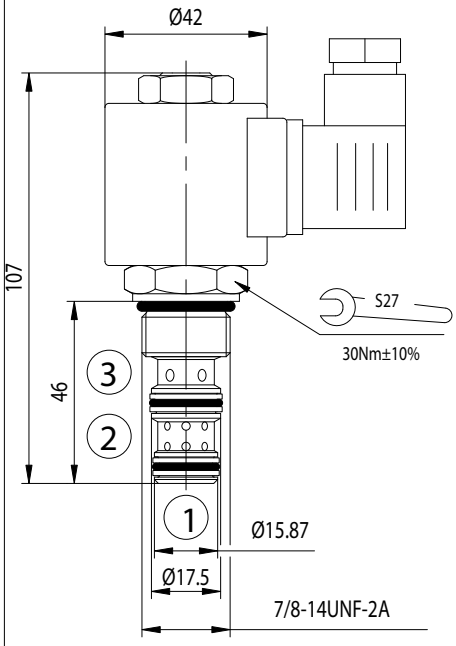

DESCRIPTION

A solenoid-operated, 3-way, direct-acting, spool-type, screw-in hydraulic cartridge valve.

OPERATION

When de-energized, the EV10-3C allows flow from 2 to 1, while blocking flow at 3.
When energized, the cartridge's spool shifts to open from 1 to 3, while blocking at 2.

RATINGS

Operating Pressure: 210 bar
Flow: 23L/min. max.
Internal Leakage: 80 cc/minute max. at 210 bar
Temperature: -20 to 90°C with standard Buna seals
Coil Duty Rating: Continuous from 85 % to 115 % of nominal voltage
Minimum Pull-in Voltage: 85 % of nominal at 210 bar
Filtration: Recommend 10 µm nominal or better
Fluids: Mineral-based or synthetics with lubricating properties at viscosities of 7.4 to 420 cSt
Installation: No restrictions
Cavity: CC10-3; See page 8.2.04

SYMBOL

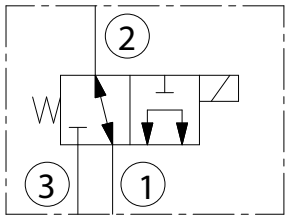

CAVITY

See page 8.2.04

TO ORDER

EV10-3C

Voltage	Seals
0 - Without coil	N - Buna N
12 - 12 V DC	V - Viton A
24 - 24 V DC	
11 - 110V RAC	
22 - 220V RAC	

Terminations DIN 43650 See page 8.1.01

PERFORMANCE (Cartridge Only)

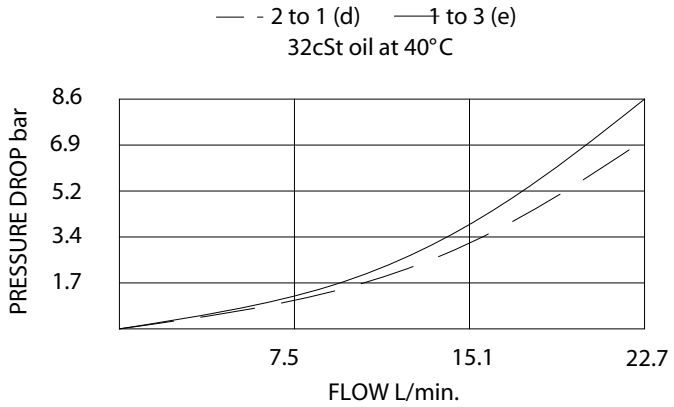

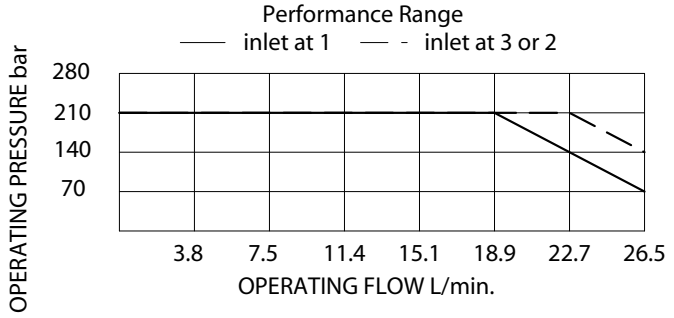

SOLENOID VALVE
EV08-3D

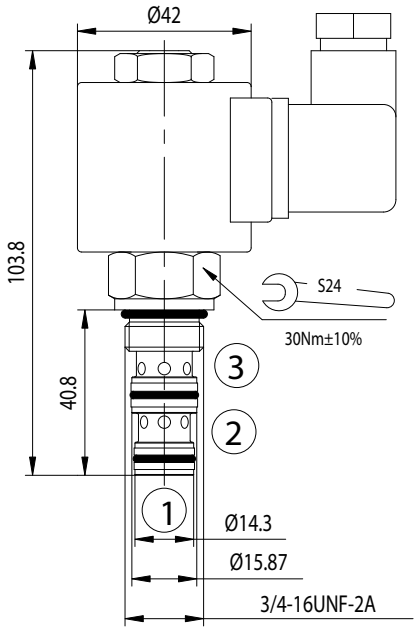

DESCRIPTION

A solenoid-operated, 3-way, direct-acting, spool-type, screw-in hydraulic cartridge valve.

OPERATION

When de-energized, the EV08-3D allows flow from 3 to 1, while blocking flow at 2.
When energized, the cartridge's spool shifts to open from 2 to 3, while blocking at 1.

RATINGS

Operating Pressure: 210 bar
Flow: 8 L/min. max.
Internal Leakage: 82 cc/minute max. at 210 bar
Temperature: -20 to 90°C with standard Buna seals
Coil Duty Rating: Continuous from 85 % to 115 % of nominal voltage
Minimum Pull-in Voltage: 85 % of nominal at 210 bar
Filtration: Recommend 10 µm nominal or better
Fluids: Mineral-based or synthetics with lubricating properties at viscosities of 7.4 to 420 cSt
Installation: No restrictions
Cavity: CC08-3; See page 8.2.03

SYMBOL

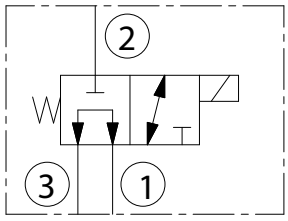

CAVITY

See page 8.2.03

TO ORDER

EV08-3D

Voltage	Seals
0 - Without coil	N - Buna N
12 - 12 V DC	V - Viton A
24 - 24 V DC	
11 - 110V RAC	
22 - 220V RAC	

Terminations DIN 43650 See page 8.1.01

PERFORMANCE (Cartridge Only)

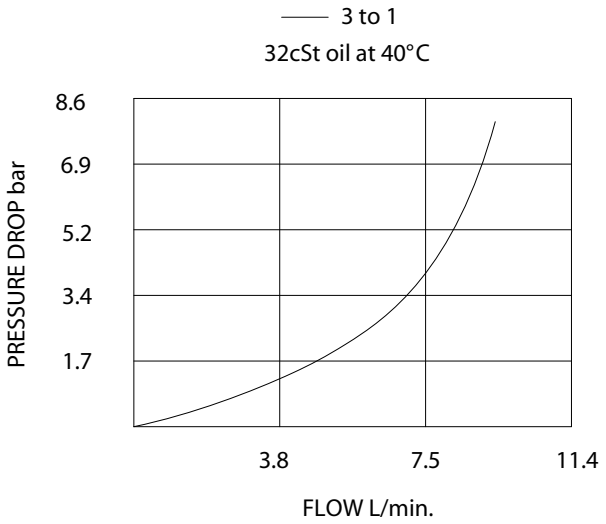

SOLENOID VALVE
EV58-3D

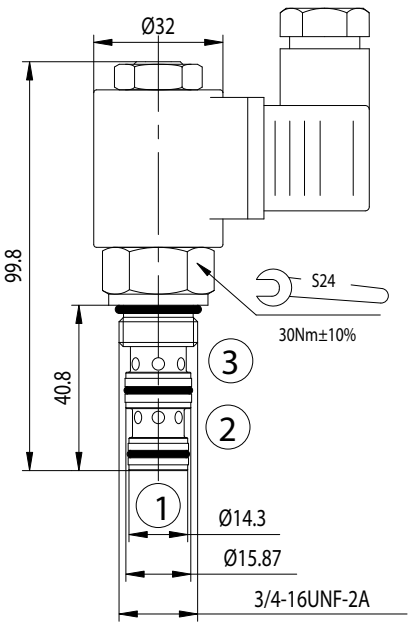

DESCRIPTION

A solenoid-operated, 3-way, direct-acting, spool-type, screw-in hydraulic cartridge valve.

OPERATION

When de-energized, the EV58-3D allows flow from 3 to 1, while blocking flow at 2.
When energized, the cartridge's spool shifts to open from 2 to 3, while blocking at 1.

RATINGS

Operating Pressure: 210 bar
Flow: 8 L/min. max.
Internal Leakage: 82 cc/minute max. at 210 bar
Temperature: -20 to 90°C with standard Buna seals
Coil Duty Rating: Continuous from 85 % to 115 % of nominal voltage
Minimum Pull-in Voltage: 85 % of nominal at 210 bar
Filtration: Recommend 10 µm nominal or better
Fluids: Mineral-based or synthetics with lubricating properties at viscosities of 7.4 to 420 cSt
Installation: No restrictions
Cavity: CC08-3; See page 8.2.03

SYMBOL

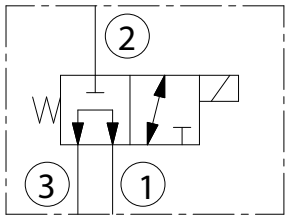

CAVITY

See page 8.2.03

TO ORDER

EV58-3D

Voltage	Seals
0 - Without coil	N - Buna N
12 - 12 V DC	V - Viton A
24 - 24 V DC	
11 - 110V RAC	
22 - 220V RAC	

Terminations DIN 43650 See page 8.1.01

PERFORMANCE (Cartridge Only)

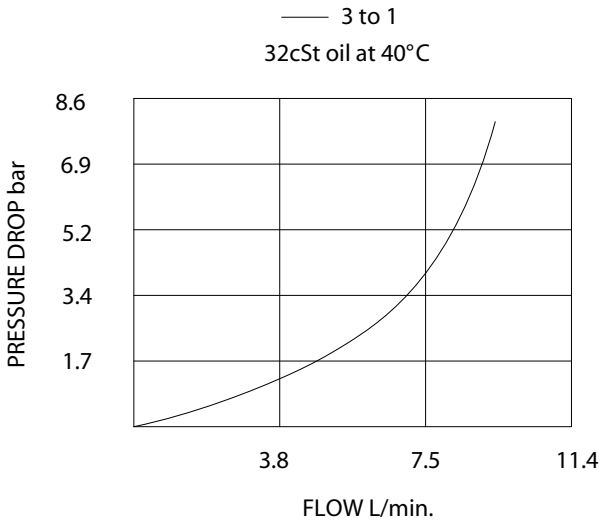

SOLENOID VALVE
EV10-3D

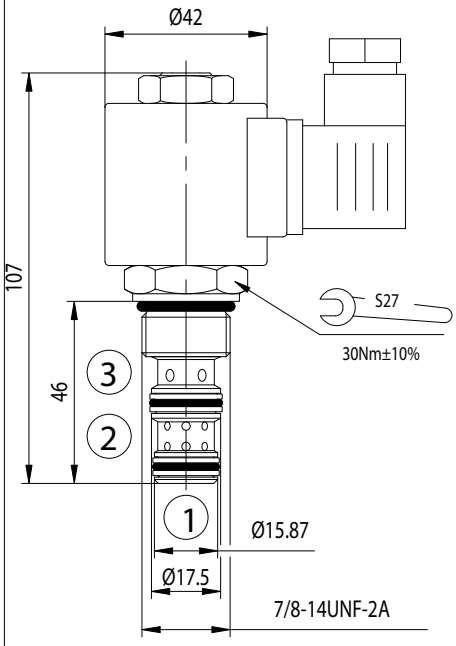

DESCRIPTION

A solenoid-operated, 3-way, direct-acting, spool-type, screw-in hydraulic cartridge valve.

OPERATION

When de-energized, the EV10-3D allows flow from 3 to 1, while blocking flow at 2.
When energized, the cartridge's spool shifts to open from 1 to 2, while blocking at 3.

RATINGS

Operating Pressure: 210 bar
Flow: 23L/min. max.
Internal Leakage: 80 cc/minute max. at 210 bar
Temperature: -20 to 90°C with standard Buna seals
Coil Duty Rating: Continuous from 85 % to 115 % of nominal voltage
Minimum Pull-in Voltage: 85 % of nominal at 210 bar
Filtration: Recommend 25 µm nominal or better
Fluids: Mineral-based or synthetics with lubricating properties at viscosities of 7.4 to 420 cSt
Installation: No restrictions
Cavity: CC10-3; See page 8.2.04

SYMBOL

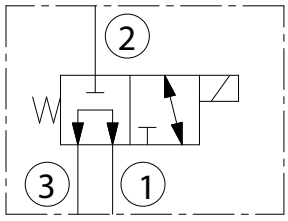

CAVITY

See page 8.2.04

TO ORDER

EV10-3D

Voltage	Seals
0 - Without coil	N - Buna N
12 - 12 V DC	V - Viton A
24 - 24 V DC	
11 - 110V RAC	
22 - 220V RAC	

Terminations DIN 43650 See page 8.1.01

PERFORMANCE (Cartridge Only)

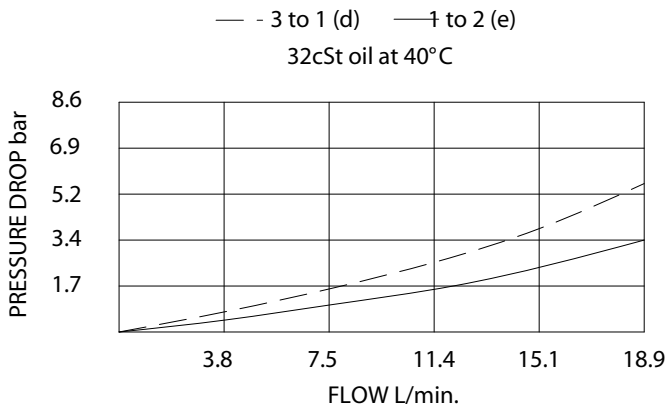

SOLENOID VALVE
EV08-4A

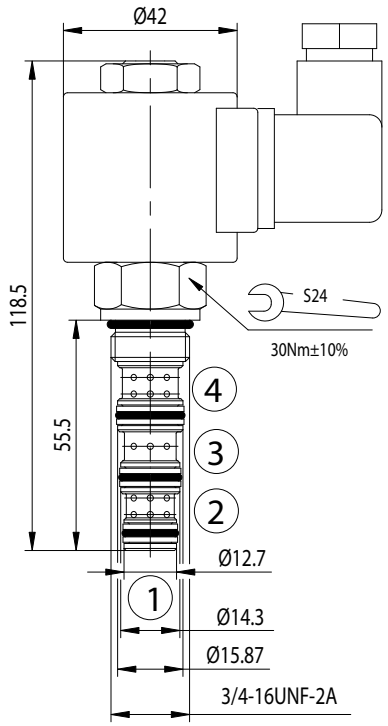

DESCRIPTION

A solenoid-operated, 4-way, 2-position, direct-acting spool-type, screw-in hydraulic cartridge valve.

OPERATION

When de-energized, the EV08-4A flow paths are 3 to 2, and 4 to 1.
When energized, the valve's spool shifts to open 3 to 4, and 2 to 1. All ports are open at cross-over.

RATINGS

Operating Pressure: 210 bar
Flow: 8 L/min max
Internal Leakage: 82 cc/minute max. at 210 bar
Temperature: -20 to 90°C with standard Buna seals
Coil Duty Rating: Continuous from 85 % to 115 % of nominal voltage
Minimum Pull-in Voltage: 85 % of nominal at 210 bar
Filtration: Recommend 10 µm nominal
Fluids: Mineral-based or synthetics with lubricating properties at viscosities of 7.4 to 420 cSt
Installation: No restrictions
Cavity: VC08-4; See page 8.2.03

SYMBOL

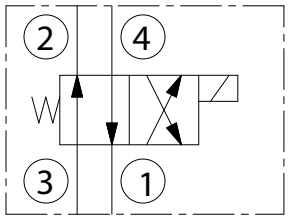

CAVITY

See page 8.2.03

TO ORDER

EV08-4A

Voltage	Seals
0 - Without coil	N - Buna N
12 - 12 V DC	V - Viton A
24 - 24 V DC	
11 - 110V RAC	
22 - 220V RAC	

Terminations DIN 43650 See page 8.1.01

PERFORMANCE (Cartridge Only)

3 to 4 —; 2 to 1 --

32cSt oil at 40°C

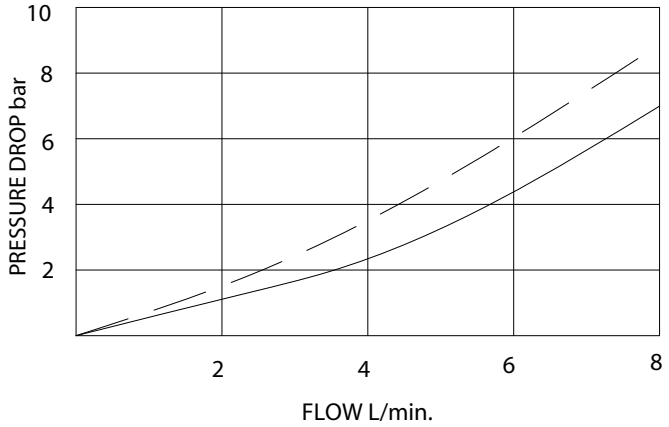

SOLENOID VALVE
EV58-4A

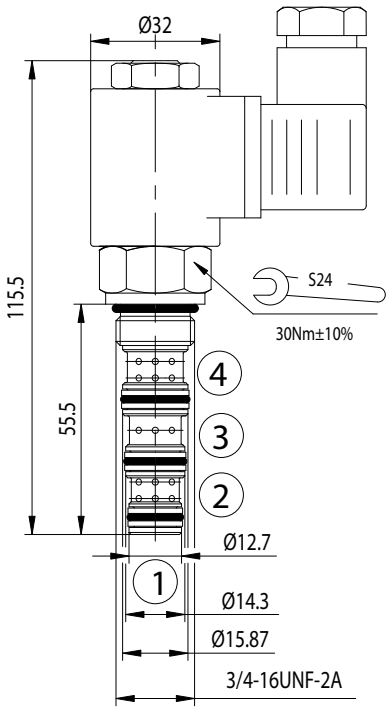

SYMBOL

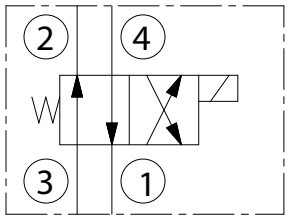

DESCRIPTION

A solenoid-operated, 4-way, 2-position, direct-acting spool-type, screw-in hydraulic cartridge valve.

OPERATION

When de-energized, the EV58-4A flow paths are 3 to 2, and 4 to 1.
When energized, the valve's spool shifts to open 3 to 4, and 2 to 1. All ports are open at cross-over.

RATINGS

Operating Pressure: 210 bar
Flow: 8 L/min max
Internal Leakage: 82 cc/minute max. at 210 bar
Temperature: -20 to 90°C with standard Buna seals
Coil Duty Rating: Continuous from 85 % to 115 % of nominal voltage
Minimum Pull-in Voltage: 85 % of nominal at 210 bar
Filtration: Recommend 10 µm nominal
Fluids: Mineral-based or synthetics with lubricating properties at viscosities of 7.4 to 420 cSt
Installation: No restrictions
Cavity: VC08-4; See page 8.2.03

CAVITY

See page 8.2.03

TO ORDER

EV58-4A

Voltage	Seals
0 - Without coil	N - Buna N
12 - 12 V DC	V - Viton A
24 - 24 V DC	
11 - 110V RAC	
22 - 220V RAC	

Terminations DIN 43650 See page 8.1.01

PERFORMANCE (Cartridge Only)

3 to 4 —; 2 to 1 --

32cSt oil at 40°C

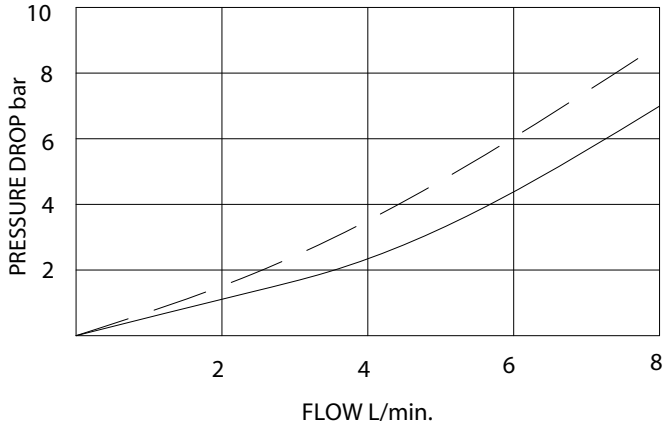

SOLENOID VALVE
EV10-4A

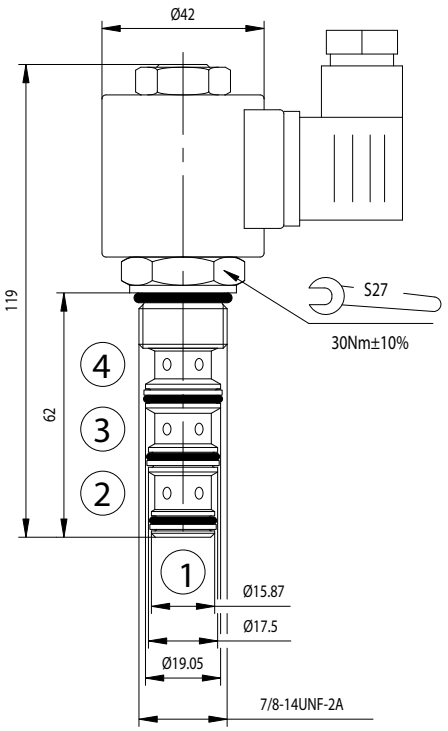

DESCRIPTION

A solenoid-operated, 4-way, 2-position, direct-acting, spool-type, screw-in hydraulic cartridge valve.

OPERATION

When de-energized, the EV10-4A allows flow from 3 to 2, as well as from 4 to 1.
When energized, the cartridge's spool shifts to open 3 to 4, and 2 to 1.

RATINGS

Operating Pressure: 210 bar
Flow: 23L/min. max.
Internal Leakage: 60 cc/minute max. at 210 bar
Temperature: -20 to 90°C with standard Buna seals
Coil Duty Rating: Continuous from 85 % to 115 % of nominal voltage
Minimum Pull-in Voltage: 85 % of nominal at 210 bar
Filtration: Recommend 25 µm nominal or better
Fluids: Mineral-based or synthetics with lubricating properties at viscosities of 7.4 to 420 cSt
Installation: No restrictions
Cavity: CC10-4; See page 8.2.05

SYMBOL

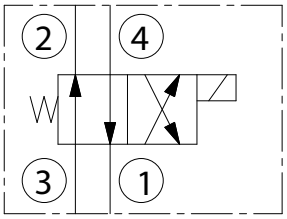

CAVITY

See page 8.2.05

TO ORDER

EV10-4A

Voltage	Seals
0 - Without coil	N - Buna N
12 - 12 V DC	V - Viton A
24 - 24 V DC	
11 - 110V RAC	
22 - 220V RAC	

Terminations DIN 43650 See page 8.1.01

PERFORMANCE (Cartridge Only)

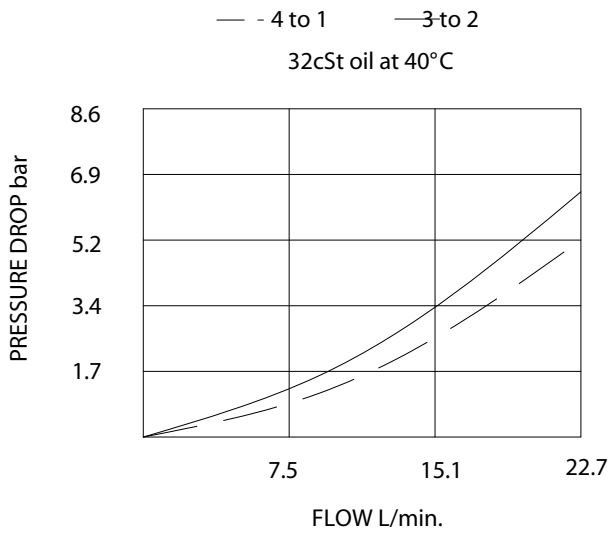

RELIEF VALVE
RV06-2A

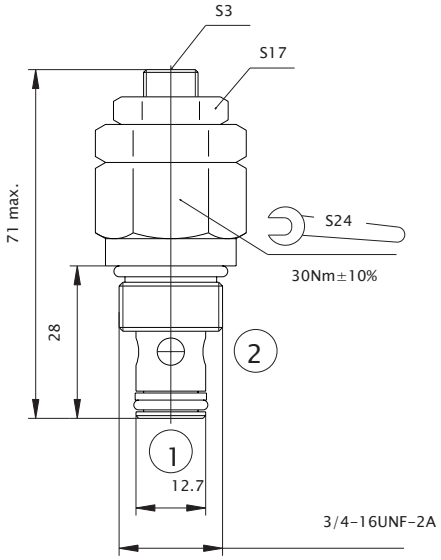

DESCRIPTION

A screw-in, cartridge-style, direct-acting, poppet-type, hydraulic relief valve intended for lower flow circuits requiring low internal leakage.

OPERATION

The RV06-2A blocks flow from 1 to 2 until sufficient pressure is present at 1 to force the spring-opposed poppet from its seat.

RATINGS

Operating Pressure: 250 bar
Flow: The Performance Chart illustrates flow handling capacity at max. setting for each spring range option. Pressure rise will vary with spring (range) and with setting within range due to flow forces.
Internal Leakage: 0.25 cc/minute at 200 bar max. to 75 % of nominal setting
Standard Spring Range: 10 to 80 bar
40 to 160 bar
80 to 250 bar
Temperature: -20 to 90°C with standard Buna seals
Filtration: Recommend 25 µm nominal or better
Fluids: Mineral-based or synthetics with lubricating properties at viscosities of 7.4 to 420 cSt
Installation: No restrictions
Cavity: CC06-2; See page 8.2.01

SYMBOL

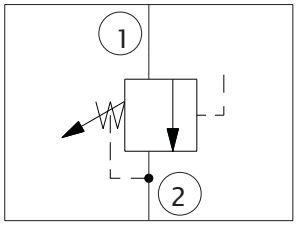

CAVITY

See page 8.2.01

TO ORDER

RV06-2A

	Seals
8 - 10...80bar	N - Buna N
16 - 40...160bar	V - Viton A
25 - 80...250bar	

PERFORMANCE (Cartridge Only)

Flow Characteristic

32cSt oil at 40°C

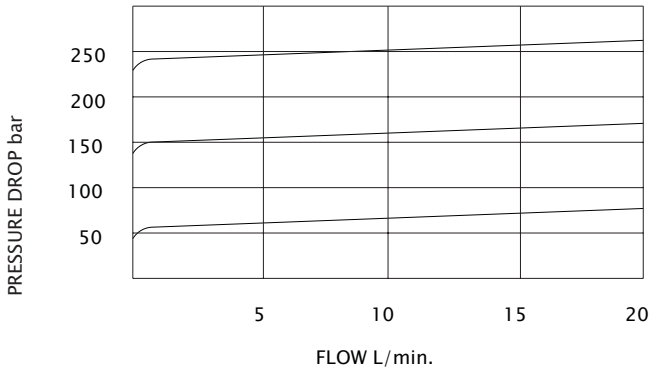

RELIEF VALVE
RV08-2A

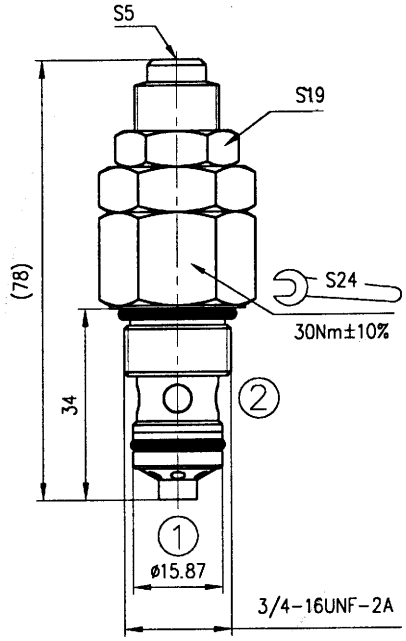

DESCRIPTION

A screw-in, cartridge-style, direct-acting, poppet-type, hydraulic relief valve intended for lower flow circuits requiring low internal leakage.

OPERATION

The RV08-2A blocks flow from 1 to 2 until sufficient pressure is present at 1 to force the spring-opposed poppet from its seat.

RATINGS

Operating Pressure: 250 bar
Flow: The Performance Chart illustrates flow handling capacity at max. setting for each spring range option. Pressure rise will vary with spring (range) and with setting within range due to flow forces.
Internal Leakage: 0.25 cc/minute at 200 bar max. to 75% of nominal setting
Standard Spring Ranges:
- 0 to 80 bar
- 0 to 160 bar
- 50 to 250 bar

Temperature: -20 to 90°C with standard Buna seals
Filtration: Recommend 25 μm nominal or better
Fluids: Mineral-based or synthetics with lubricating properties at viscosities of 7.4 to 420 cSt
Installation: No restrictions
Cavity: CC08-2A; See page 8.2.02

SYMBOL

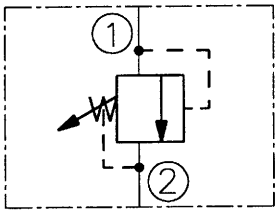

CAVITY

See page 8.2.02

TO ORDER

RV08-2A

	Seals
8 - 20...80bar	N - Buna N
16 - 40...160bar	V - Viton A
25 - 80...250bar	

PERFORMANCE (Cartridge Only)

Flow Characteristic
32cSt oil at 40°C

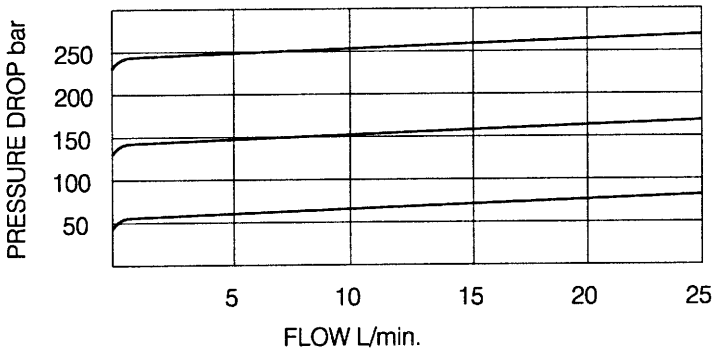

CHECK VALVE
CV08-2A

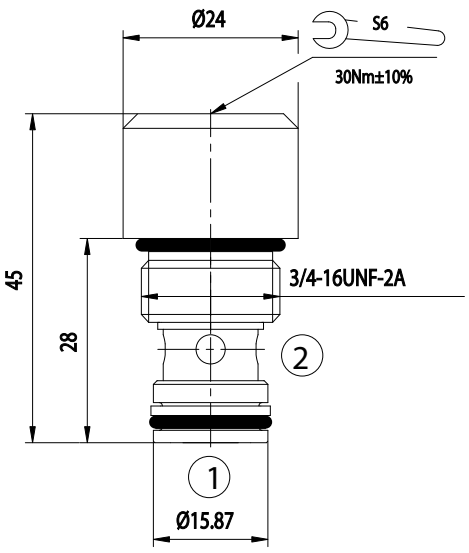

DESCRIPTION

A screw-in, cartridge-style, hydraulic check valve for use as a blocking or load-holding device.

OPERATION

The CV08-2A allows flow passage from 2 to 1, while normally blocking oil flow in the opposite direction.
The cartridge has a fully guided poppet which is spring-biased closed until sufficient pressure is applied at 2 to open to 1.

RATINGS

Operating Pressure: 250 bar
Flow: See Performance Chart
Internal Leakage: 0.25 cc/minute max. at 250 bar
Standard Bias Spring: 1.2 bar
Temperature: -20 to 90°C
Filtration: Recommend 25 µm nominal or better
Fluids: Mineral-based or synthetics with lubricating properties at viscosities of 7.4 to 420 cSt
Installation: No restrictions
Cavity: CC08-2; See page 8.2.01

SYMBOL

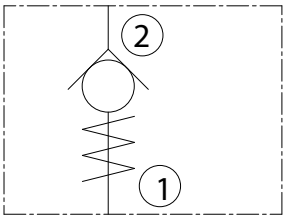

CAVITY

See page 8.2.01

TO ORDER

CV08-2A

Seals

N - Buna N
V - Viton A

PERFORMANCE (Cartridge Only)

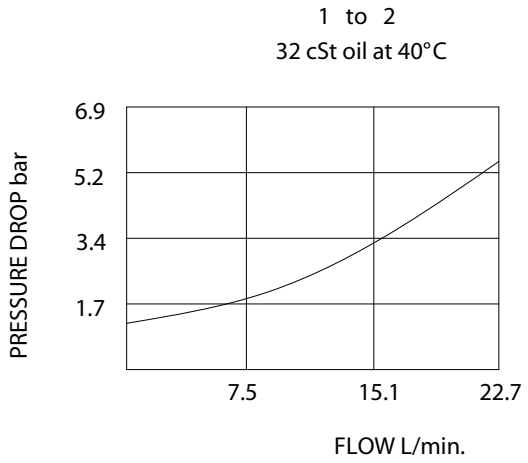

CHECK VALVE
CV08-2B

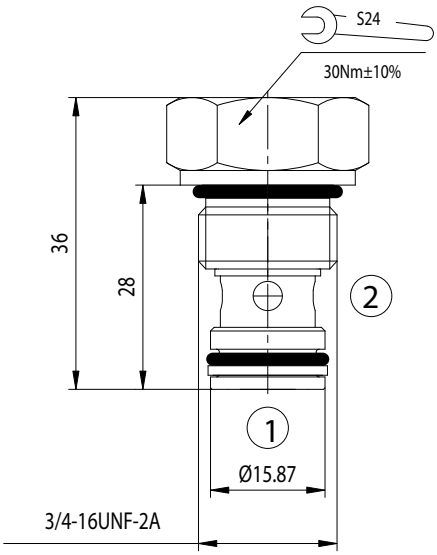

DESCRIPTION

A screw-in, cartridge-style, hydraulic check valve for use as a blocking or load-holding device.

OPERATION

The CV08-2B allows flow passage from 1 to 2, while normally blocking oil flow in the opposite direction.
The cartridge has a fully guided poppet which is spring-biased closed until sufficient pressure is applied at 1 to open to 2.

RATINGS

Operating Pressure: 250 bar
Flow: See Performance Chart
Internal Leakage: 0.25 cc/minute max. at 250 bar
Standard Bias Spring: 1.2 bar
Temperature: -20 to 90°C
Filtration: Recommend 25 µm nominal or better
Fluids: Mineral-based or synthetics with lubricating properties at viscosities of 7.4 to 420 cSt
Installation: No restrictions
Cavity: CC08-2; See page 8.2.01

SYMBOL

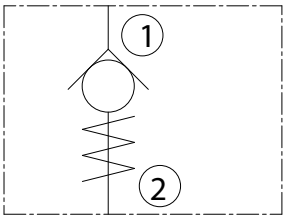

CAVITY

See page 8.2.01

TO ORDER

CV08-2B

Seals

N - Buna N
V - Viton A

PERFORMANCE (Cartridge Only)

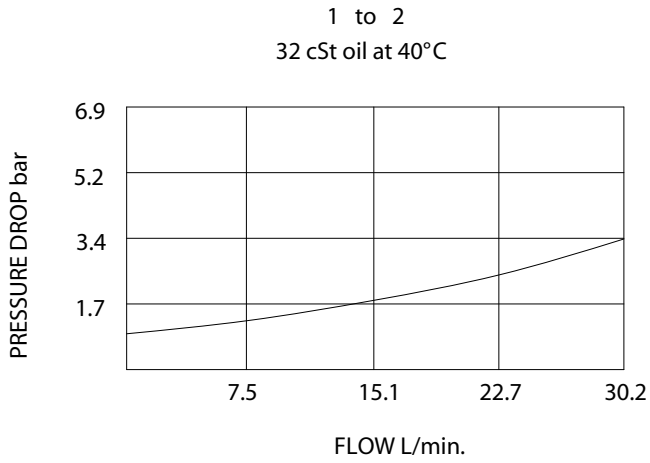

CHECK VALVE
CV10-2B

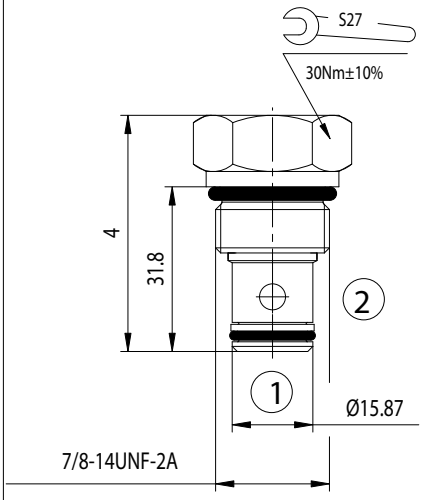

DESCRIPTION

A screw-in, cartridge-style, hydraulic check valve for use as a blocking or load-holding device.

OPERATION

The CV10-2B allows flow passage from 1 to 2, while normally blocking oil flow in the opposite direction.
The cartridge has a fully guided poppet which is spring-biased closed until sufficient pressure is applied at 1 to open to 2.

RATINGS

Operating Pressure: 250 bar
Flow: See Performance Chart
Internal Leakage: 0.25 cc/minute max. at 250 bar
Standard Bias Spring: 2.1 bar
Temperature: -20 to 90°C
Filtration: Recommend 25 µm nominal or better
Fluids: Mineral-based or synthetics with lubricating properties at viscosities of 7.4 to 420 cSt
Installation: No restrictions
Cavity: CC10-2; See page 8.2.04

SYMBOL

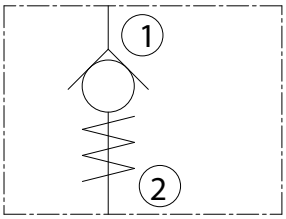

CAVITY

See page 8.2.04

TO ORDER

CV10-2B

Seals

N - Buna N
V - Viton A

PERFORMANCE (Cartridge Only)

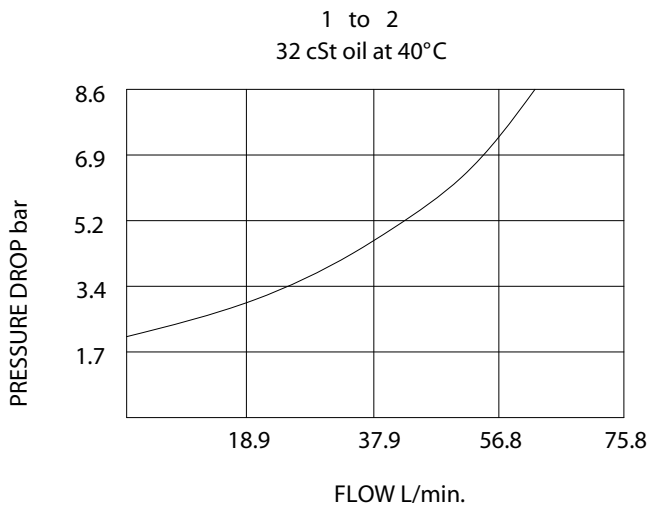

CHECK PILOT-TO-OPEN
CPV08-3A

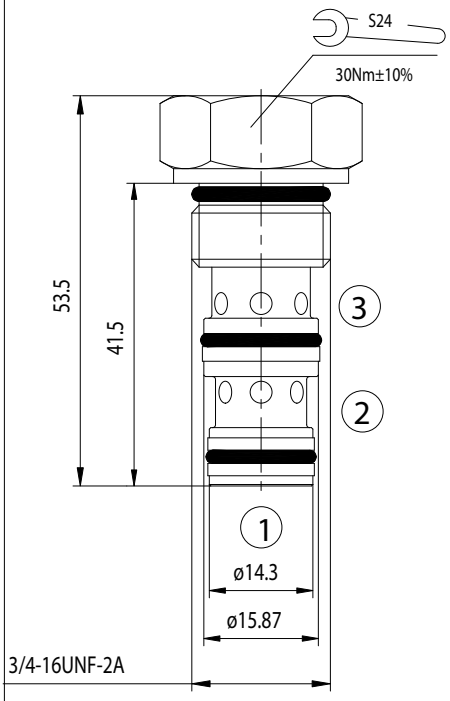

DESCRIPTION

A screw-in, cartridge-style, pilot-operated, hydraulic check valve for use in blocking or load-holding circuits.

OPERATION

The CPV08-3A allows flow from 2 to 3, while normally blocking flow from 3 to 2.
Flow will be allowed from 3 to 2 when sufficient pressure is applied at 1.
The cartridge has a 3:1 pilot ratio, meaning that at least one-third of the load pressure held at 3 is required at 1 to open the valve.
The check is spring-biased to assure holding in static or no-load conditions. A sealed pilot piston option is available.

RATINGS

Operating Pressure: 250 bar
Flow: See Performance Chart
Internal Leakage: 1 to 2: 0.25 cc/minute max. at 250 bar
2 to 1 (without sealed piston): 115 cc/minute max. at 250 bar
Pilot Ratio: 3:1
Check Spring Bias: 2 bar
Temperature: -20 to 90°C with standard Buna seals
Filtration: Recommend 25 µm nominal or better
Fluids: Mineral-based or synthetics with lubricating properties at viscosities of 7.4 to 420 cSt
Installation: No restrictions
Cavity: CC08-3; See page 8.2.02

SYMBOL

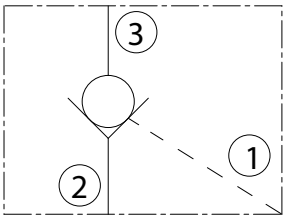

CAVITY

See page 8.2.02

TO ORDER

CPV08-3A

Seals

N - Buna N
V - Viton A

PERFORMANCE (Cartridge Only)

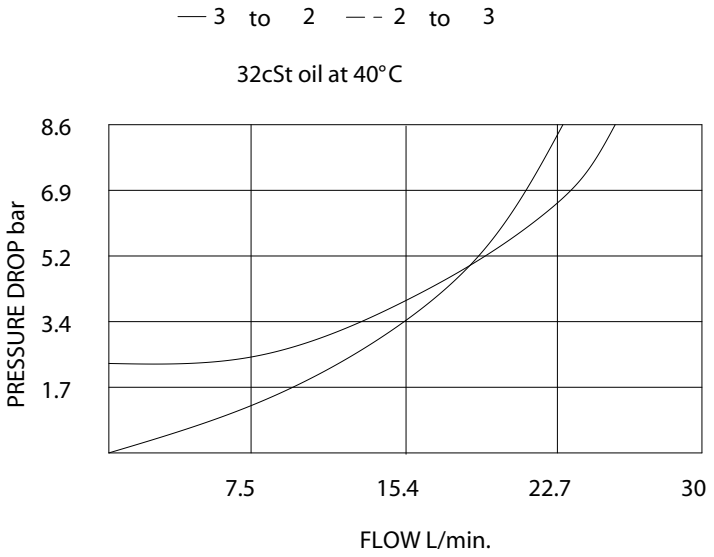

CHECK PILOT-TO-OPEN
CPV08-3B

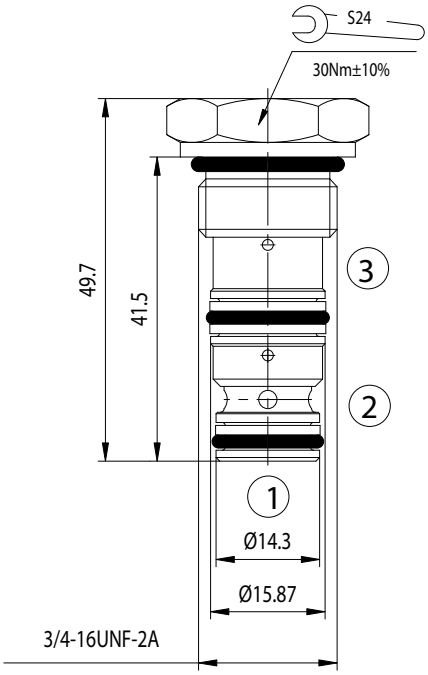

DESCRIPTION

A screw-in, cartridge-style, pilot-operated, hydraulic check valve for use in blocking or load-holding circuits.

OPERATION

The CPV08-3B allows flow from 2 to 1, while normally blocking flow from 1 to 2.
Flow will be allowed from 1 to 2 when sufficient pressure is applied at 3.
The cartridge has a 3:1 pilot ratio, meaning that at least one-third of the load pressure held at 1 is required at 3 to open the valve.

RATINGS

Operating Pressure: 210 bar
Flow: See Performance Chart
Internal Leakage: 1 to 2: 0.25 cc/minute max. at 210 bar
Pilot Ratio: 3:1
Check Spring Bias: 4.8 bar
Temperature: -20 to 90°C with standard Buna seals
Filtration: Recommend 25 µm nominal or better
Fluids: Mineral-based or synthetics with lubricating properties at viscosities of 7.4 to 420 cSt
Installation: No restrictions
Cavity: CC08-3; See page 8.2.02

SYMBOL

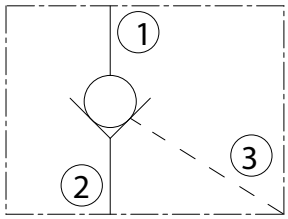

CAVITY

See page 8.2.02

TO ORDER

CPV08-3B

Seals

N - Buna N
V - Viton A

PERFORMANCE (Cartridge Only)

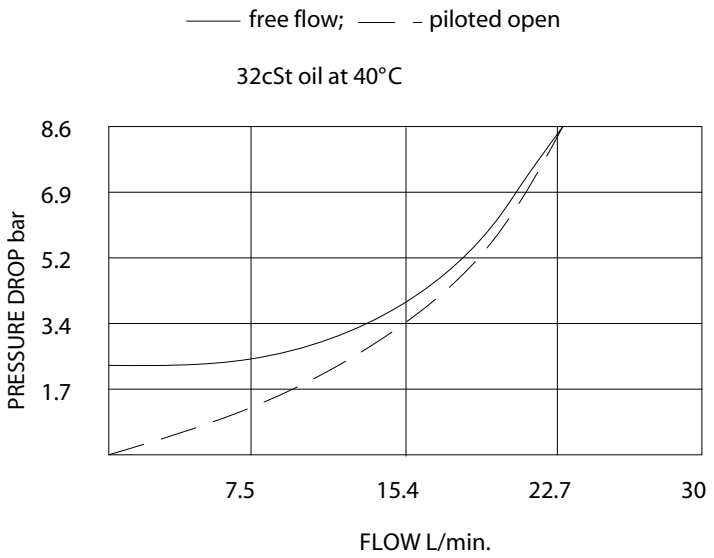

LOAD SHUTTLE
LSV10-3A

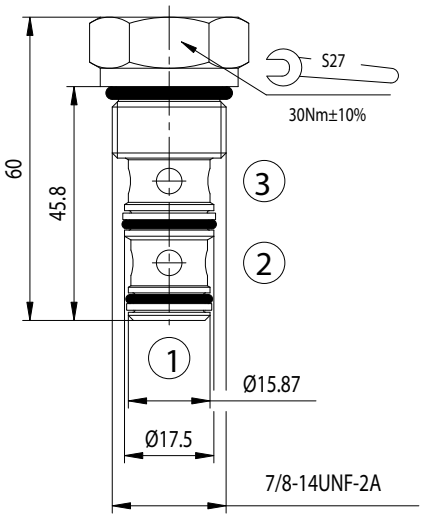

DESCRIPTION

A load-shuttling, screw-in, cartridge-style hydraulic check valve, for use in blocking circuits where a priority of flow/direction is given to a higher pressure circuit over a lower one.

OPERATION

The LSV10-3A will allow flow from the higher pressure 1 or 2 port to the 2 port. The valve is commonly used to direct oil from the pressure side of a bidirectional hydraulic motor to a pressure-released hydraulic brake.

RATINGS

Operating Pressure: 210 bar
Flow: See Performance Chart
Internal Leakage: 0.25 cc/minute max. at 210 bar
Temperature: -20 to 90°C with standard Buna seals
Filtration: Recommend 25 µm nominal or better
Fluids: Mineral-based or synthetics with lubricating properties at viscosities of 7.4 to 420 cSt
Installation: No restrictions
Cavity: CC10-3; See page 8.2.04

SYMBOL

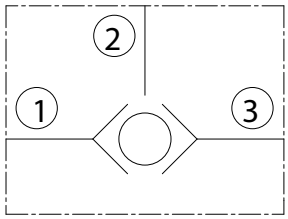

CAVITY

See page 8.2.04

TO ORDER

LSV10-3A

Seals

N - Buna N
V - Viton A

PERFORMANCE (Cartridge Only)

1 or 3 to 2
32 cSt oil at 40°C

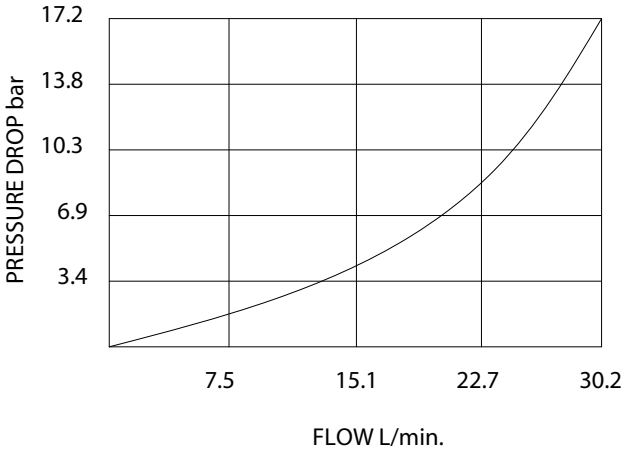

PILOTED 2-WAY SPOOL, EXTERNAL VENT
HV10-3A

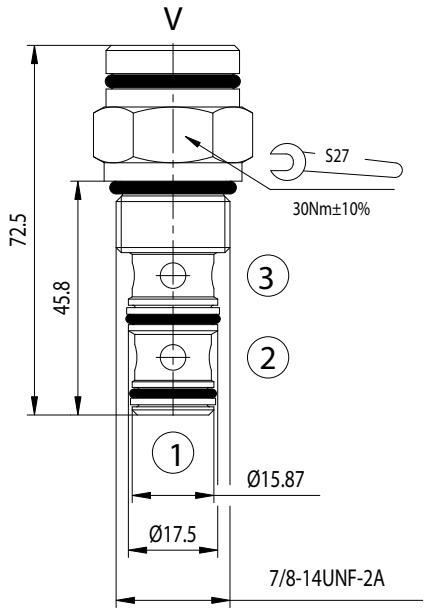

DESCRIPTION

A screw-in, cartridge-style, pilot-operated, spool-type, normally open hydraulic directional valve for two-way circuits requiring remote pilot actuation.

OPERATION

In neutral (unpiloted), the HV10-3A allows flow from 3 to 2 bidirectionally. V is a spring chamber vent-to-atmosphere, which is internally O-ring sealed from the cartridge flow paths.
On remote pilot signal at 1, the valve shifts to block 3 to 2 bidirectionally.

RATINGS

Operating Pressure: 240 bar
Flow: See Performance Chart
Internal Leakage: 82 cc/minute max. at 210 bar
Pilot Pressure Required: To Full Spool Shift:
for 4.1 bar spring: 4.7 bar
for 7.6 bar spring: 8.6 bar
Temperature: -20 to 90°C with standard Buna seals
Filtration: Recommend 25 µm nominal or better
Fluids: Mineral-based or synthetics with lubricating properties at viscosities of 7.4 to 420 cSt
Installation: No restrictions
Cavity: CC10-3; See page 8.2.04

SYMBOL

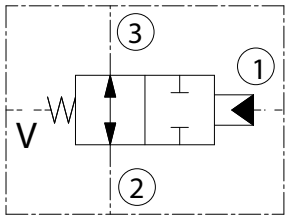

CAVITY

See page 8.2.04

TO ORDER

HV10-3A

Seals

N - Buna N
V - Viton A

PERFORMANCE (Cartridge Only)

3 to 2
32 cSt oil at 40°C

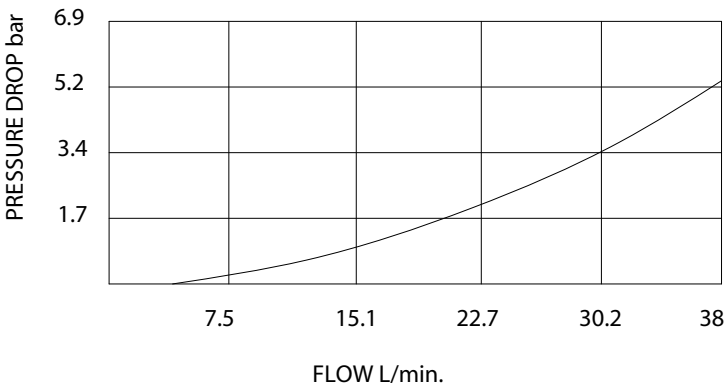

PLOTED LOGIC VALVE
PLV10-SA

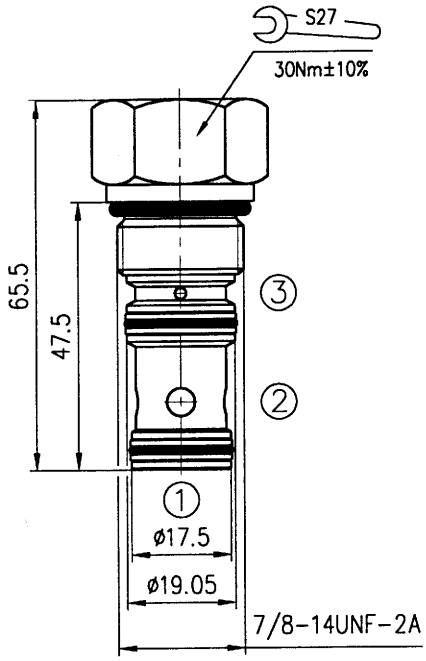

DESCRIPTION

A spool-type, screw-in, cartridge-style, hydraulic directional element, with multi function potential when used with other directional, pressure, or flow control devices.

OPERATION

The PLV10-SA is a spring-biased poppet valve which will block 1 to 2 or 2 to 1 until pressure at 1 or 2 exceeds the cumulative pressure at 3 and bias spring. With no pressure at 3, flow will be allowed from 1 to 2 or 2 to 1 once the bias spring force is overcome with pressure at 1 or 2. When the element is in closed state, the ratio of areas 1 and 2 is 1:1, and the ratio of areas 1 or 2 to 3 is 1:2.

RATINGS

Operating Pressure: 350 bar
Flow: See Performance Chart
Internal Leakage: 0.2 cc/minute max. at 240 bar
Bias Spring Pressure: 11 bar
Temperature: -20 to 90°C with standard Buna seals
Filtration: Recommend 10 μm nominal or better
Fluids: Mineral-based or synthetics with lubricating properties at viscosities of 7.4 to 420 cSt
Installation: No restrictions
Cavity: CC10-S3; See page 8.2.05

SYMBOL

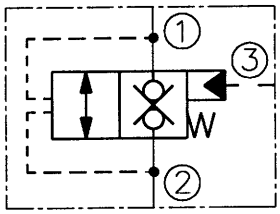

CAVITY

See page 8.2.05

TO ORDER

PLV10-SA

Seals

N - Buna N
V - Viton A

PERFORMANCE (Cartridge Only)

1 to 2 or 2 to 1 (fully open)
32cSt oil at 40°C

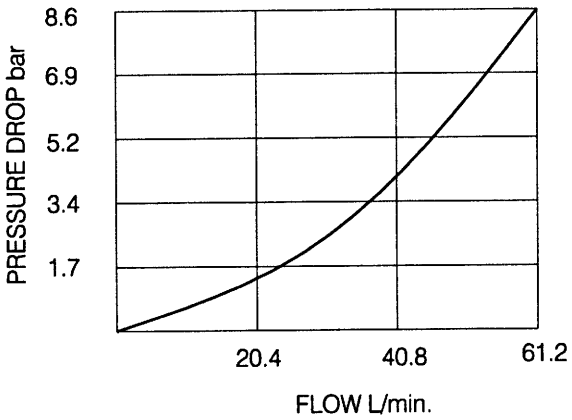

PRESSURE SEQUENCE VALVE
PSV10-3A

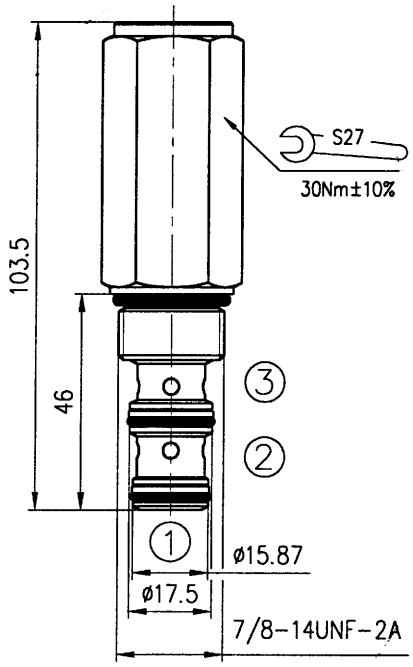

DESCRIPTION

A screw-in, cartridge-style, direct-acting, spool-type, hydraulic sequence valve with internal pilot and spring chamber drain, designed to direct flow to a secondary circuit once a pre-determined pressure level is attained in the primary circuit.

OPERATION

In its steady state, the PSV10-3A blocks flow at 1, while allowing flow to pass from 2 to 3.
On attainment of a pre-determined pressure at 1, the cartridge shifts to open 1 to 2.

RATINGS

Operating Pressure: 200 bar
Flow: See Performance Chart
Internal Leakage 1 to 2: 82 cc/minute max. to 85 % of nominal setting
Standard Spring Range: 35 to 200 bar
Temperature: -20 to 90°C with standard Buna seals
Filtration: Recommend 25 μm nominal or better
Fluids: Mineral-based or synthetics with lubricating properties at viscosities of 7.4 to 420 cSt
Installation: No restrictions
Cavity: CC10-3; See page 8.2.04

SYMBOL

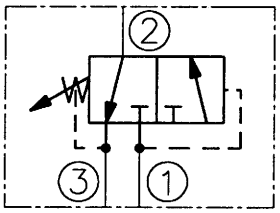

CAVITY

See page 8.2.04

TO ORDER

PSV10-3A

Seals

N - Buna N
V - Viton A

PERFORMANCE (Cartridge Only)

Flow Characteristic 1 to 2
32cSt oil at 40°C

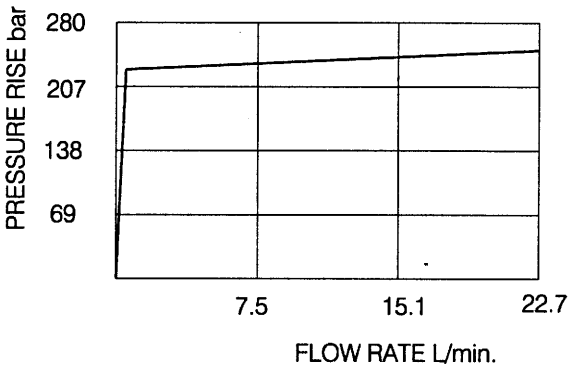

PRESSURE SEQUENCE VALVE
PSV10-3D

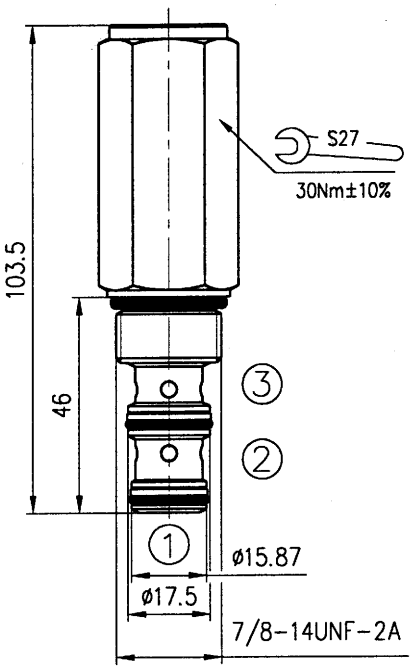

DESCRIPTION

A screw-in, cartridge-style, direct-acting, spool-type, hydraulic sequence valve with internal pilot and spring chamber drain, designed to direct flow to a secondary circuit once a pre-determined pressure level is attained in the primary circuit.

OPERATION

In its steady state, the PSV10-3D blocks flow passage from 1 to 2. When the pressure forse in 1 exceeds the spring force the valve allows flow to pass from 1 to 2.
At pressure supply in 3 the PSV10-3D opens 2 to 1 flow path bidirectionally.

RATINGS

Operating Pressure: 200 bar
Flow: See Performance Chart
Internal Leakage 1 to 2: 82 cc/minute max. to 85 % of nominal setting
Standard Spring Range: 35 to 200 bar
Temperature: -20 to 90°C with standard Buna seals
Filtration: Recommend 25 μm nominal or better
Fluids: Mineral-based or synthetics with lubricating properties at viscosities of 7.4 to 420 cSt
Installation: No restrictions
Cavity: CC10-3; See page 8.2.04

SYMBOL

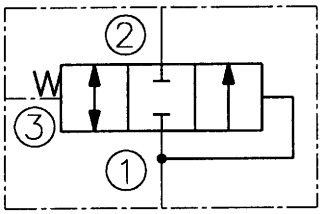

CAVITY

See page 8.2.04

TO ORDER

PSV10-3D

Seals

N - Buna N
V - Viton A

PERFORMANCE (Cartridge Only)

1 to 2 (fully open)
32cSt oil at 40°C

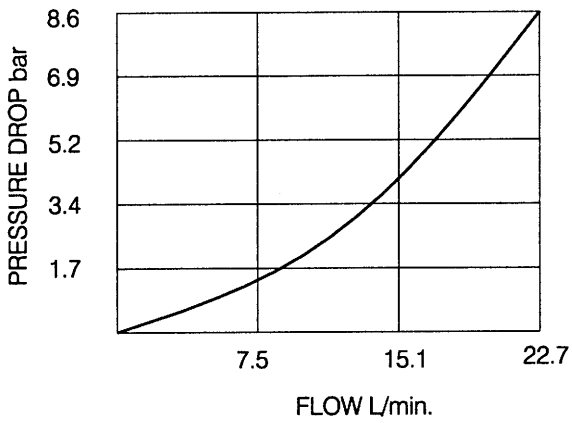

PRESSURE SEQUENCE VALVE
PSV10-3D

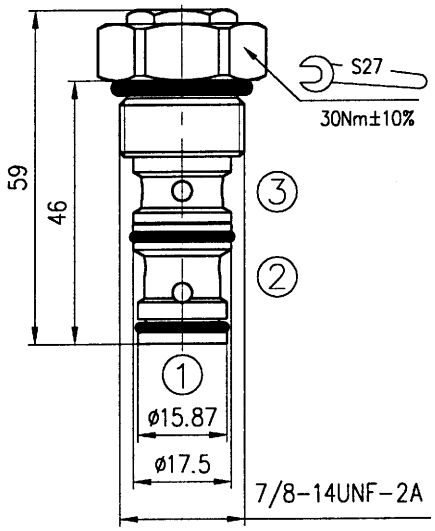

DESCRIPTION

A screw-in, cartridge-style, direct-acting, spool-type, hydraulic sequence valve with internal pilot and spring chamber drain, designed to direct flow to a secondary circuit once a pre-determined pressure level is attained in the primary circuit.

OPERATION

In its steady state, the PSV10-3H allows flow passage from 2 to 3. When the pressure forse in 1 exceeds the spring force the spool shifts to open 1 to 2 flow path.

RATINGS

Operating Pressure: 200 bar
Flow: See Performance Chart
Internal Leakage 1 to 2: 82 cc/minute max. to 85 % of nominal setting
Standard Spring Range: 15 bar
Temperature: -20 to 90°C with standard Buna seals
Filtration: Recommend 25 μm nominal or better
Fluids: Mineral-based or synthetics with lubricating properties at viscosities of 7.4 to 420 cSt
Installation: No restrictions
Cavity: CC10-3; See page 8.2.04

SYMBOL

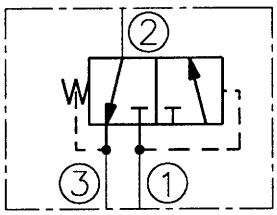

CAVITY

See page 8.2.04

TO ORDER

PSV10-3H

Seals

N - Buna N
V - Viton A

PERFORMANCE (Cartridge Only)

1 to 2 (fully open)
32cSt oil at 40°C

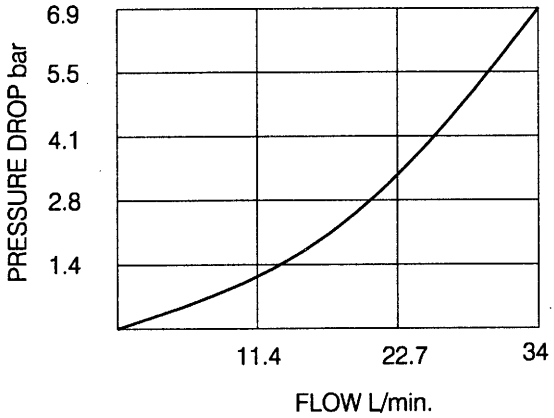

NEEDLE VILVE
NV06-2A

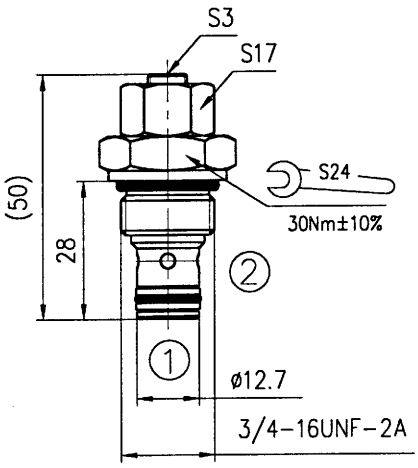

DESCRIPTION

A screw-in, cartridge-style, variable orifice, hydraulic flow restrictor valve.

OPERATION

The NV06-2A increases its orifice value from fully closed to fully open with counter-clockwise adjustment rotation.

RATINGS

Operating Pressure: 250 bar
Flow: 11 lpm nominal at 7 bar differential at full open
Internal Leakage: 0.05 cc/minute max. at shut-off
Temperature: -20 to 90°C
Filtration: Recommend 25 μm nominal or better
Fluids: Mineral-based or synthetics with lubricating properties at viscosities of 7.4 to 420 cSt
Installation: No restrictions
Cavity: CC06-2; See page 8.2.01

SYMBOL

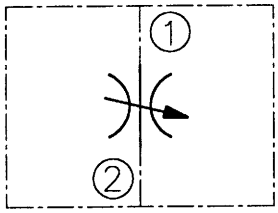

CAVITY

See page 8.2.01

TO ORDER

NV06-2A

Seals

N - Buna N
V - Viton A

PERFORMANCE (Cartridge Only)

Full Open 2 to 1 or 1 to 2
32 cSt oil at 40°C

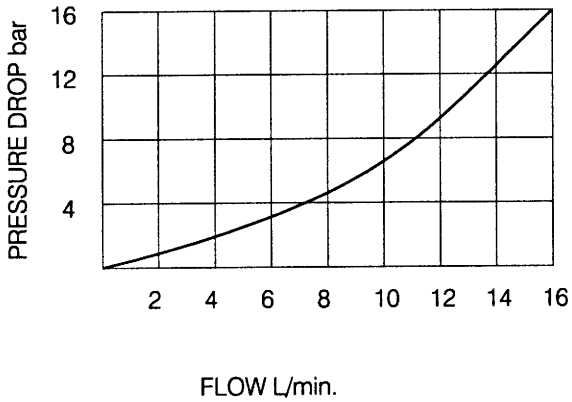

FLOW CONTROL VALVE
FC08-2A

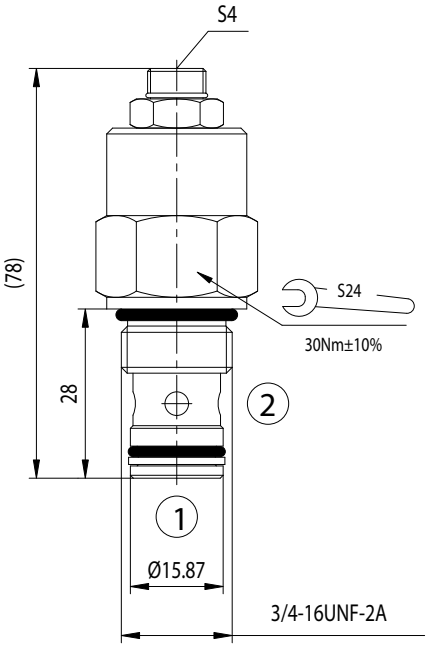

DESCRIPTION

A screw-in, cartridge-style, variable orifice, hydraulic flow control valve with reverse flow check.

OPERATION

The FC08-2A increases its orifice value from fully closed to fully open with counter-clockwise adjustment rotation.

RATINGS

Operating Pressure: 240 bar
Flow: 45 lpm nominal at 10 bar at full open
Internal Leakage: 0.5 cc/minute max. at shut-off
Temperature: -20 to 90°C
Filtration: Recommend 25 µm nominal or better
Fluids: Mineral-based or synthetics with lubricating properties at viscosities of 7.4 to 420 cSt
Installation: No restrictions
Cavity: CC08-2; See page 8.2.01

SYMBOL

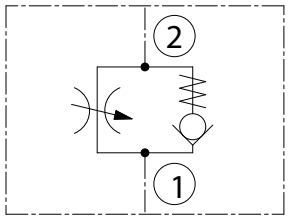

CAVITY

See page 8.2.01

TO ORDER

FC08-2A

Seals

N - Buna N
V - Viton A

PERFORMANCE (Cartridge Only)

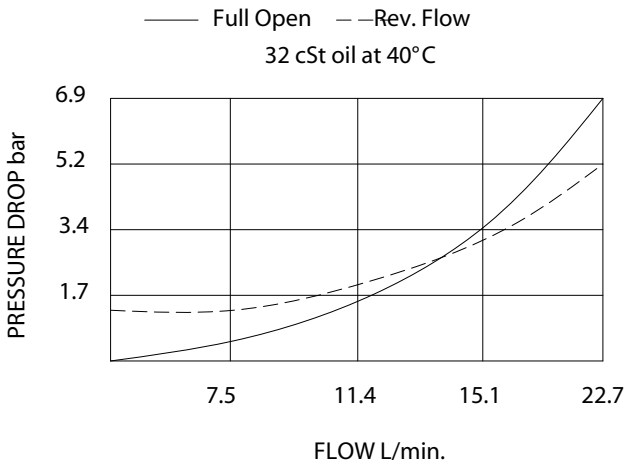

MANUAL SPRING RETURN VALVE
MV08-2B

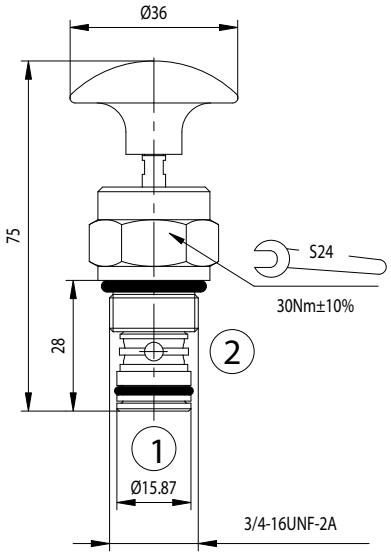

DESCRIPTION

A manual, 2-way, pull-to-open, screw-in hydraulic directional valve.

OPERATION

The MP08-2B blocks flow from 2 to 1 until an operator pulls the shaft outward.
Note: Pressure at port 1 will directly act on the spool and spring. Port 1 is intended to be a tank port only.
The bias spring allows for up to 12.4 bar back-pressure at 1 before the valve will open.

RATINGS

Operating Pressure:
Port 2: 250 bar
Port 1: 14 bar max.
Flow: See Performance Chart
Internal Leakage 2 to 1: 0.25 cc/minute max. at 250 bar
Mechanical Pull Effort Required at Rated Pressure: 4.5 kg. initial; 7kg full shift
Temperature: -40 to 120°C
Filtration: Recommend 25 µm nominal or better
Fluids: Mineral-based or synthetics with lubricating properties at viscosities of 7.4 to 420 cSt
Installation: No restrictions
Cavity: CC08-2; See page 8.2.01

SYMBOL

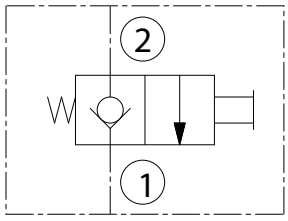

CAVITY

See page 8.2.01

TO ORDER

MV08-2B

Seals

N - Buna N
V - Viton A

PERFORMANCE (Cartridge Only)

2 to 1
32cSt oil at 40°C

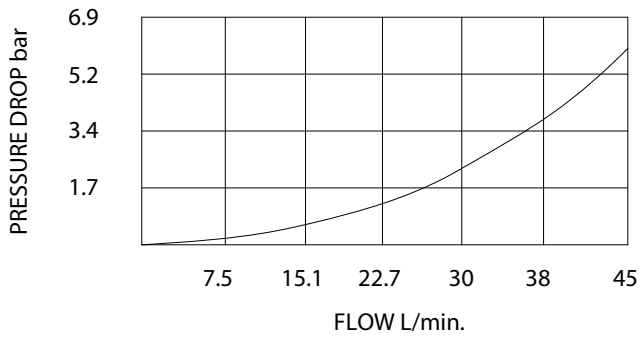

MANUAL SPRING RETURN VALVE

MV08-2B-A

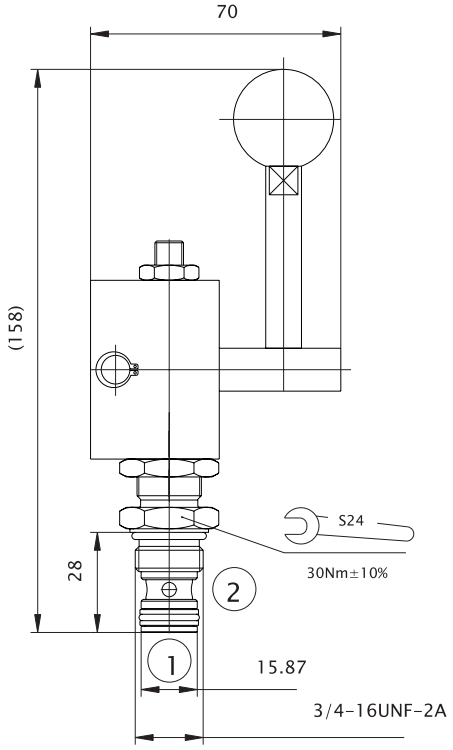

DESCRIPTION

A manual, 2-way, pull-to-open, screw-in hydraulic directional valve.

OPERATION

The MV08-2B-A blocks flow from 2 to 1 until an operator pulls the lever outward.

Note: Port 1 is intended to be a tank port only.

RATINGS

Operating Pressure: 250 bar
Flow: See Performance Chart
Internal Leakage: 0.25 cc/minute max. at 250 bar
Temperature: -20 to 90°C with standard Buna seals
Filtration: Recommend 10 µm nominal or better
Installation: No restrictions
Cavity: CC08-2; See page 8.2.01

SYMBOL

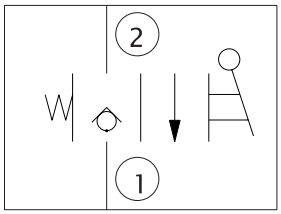

CAVITY

See page 8.2.01

TO ORDER

MV08-2B-A

Seals

N - Buna N
V - Viton A

PERFORMANCE (Cartridge Only)

From 2 to 1

32cSt oil at 40°C

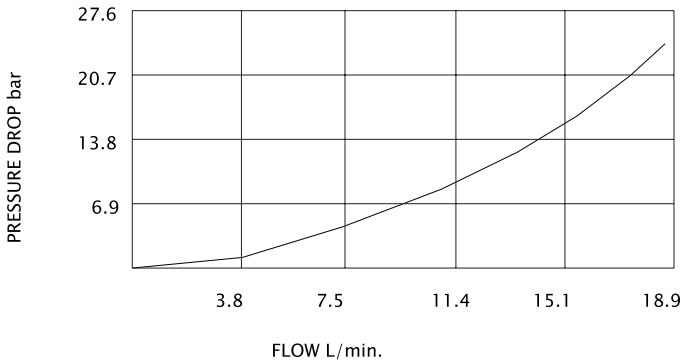

PRESSURE REDUCING VALVE
PRV10-3A

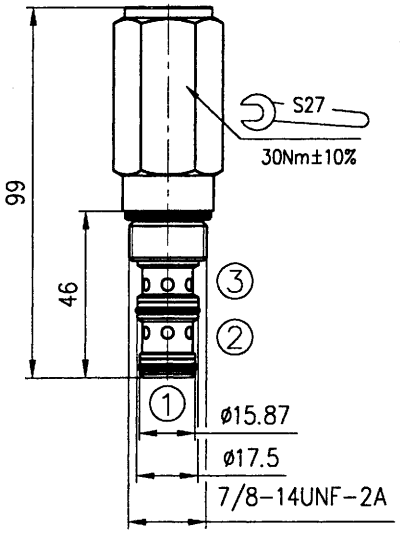

DESCRIPTION

A screw-in, cartridge-style, direct-acting, spool-type, hydraulic pressure reducing/ relieving valve with internal pilot and internal spring chamber drain, designed to act as a pressure-regulating device.

OPERATION

In its steady state, the PRV10-3A allows flow to pass bidirectionally from 2 to 1, with the spring chamber constantly drained at 3.
On attainment of a pre-determined pressure at 1, the cartridge shifts to restrict input flow at 2, thereby regulating pressure at 1. In this mode, the valve will also relieve 1 to 3 at approximately 10 bar over the reducing setting.

RATINGS

Operating Pressure: 210 bar
Flow: See Performance Chart
Internal Leakage 2 to 3: 80 cc/minute max. at 210 bar
Standard Spring Ranges (Reducing Function):
10 to 30 bar
15 to 60 bar
25 to 100 bar
40 to 140 bar
Temperature: -20 to 90°C with standard Buna seals
Filtration: Recommend 25 μm nominal or better
Fluids: Mineral-based or synthetics with lubricating properties at viscosities of 7.4 to 420 cSt
Installation: No restrictions
Cavity: CC10-3; See page 8.2.04

SYMBOL

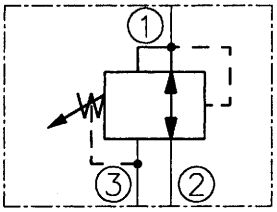

CAVITY

See page 8.2.04

TO ORDER

PRV10-3A

1 - 10 ... 30bar
2 - 15 ... 60bar
3 - 25 ... 100bar
4 - 40 ... 140bar

Seals
N - Buna N
V - Viton A

PERFORMANCE (Cartridge Only)

Flow Characteristic
32 cSt oil at 40°C

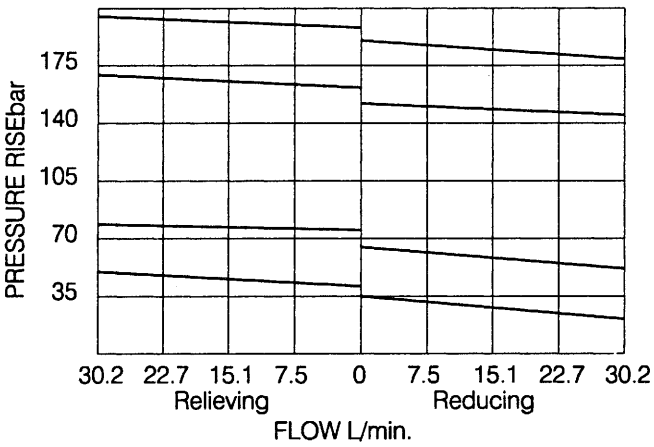

SOLENOIDS FOR CARTRIDGE VALVES

EMA 100

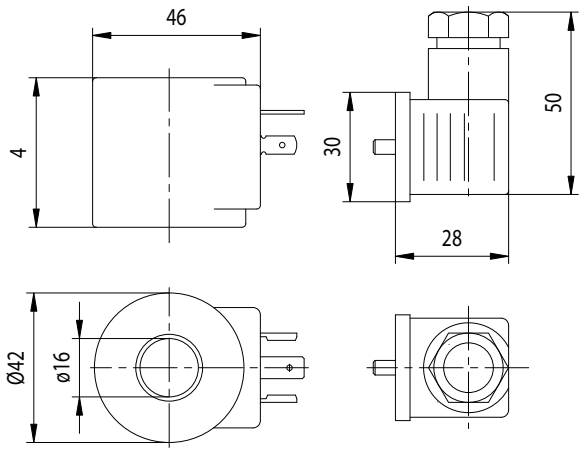

Hirschmann DIN43650

EMA 50

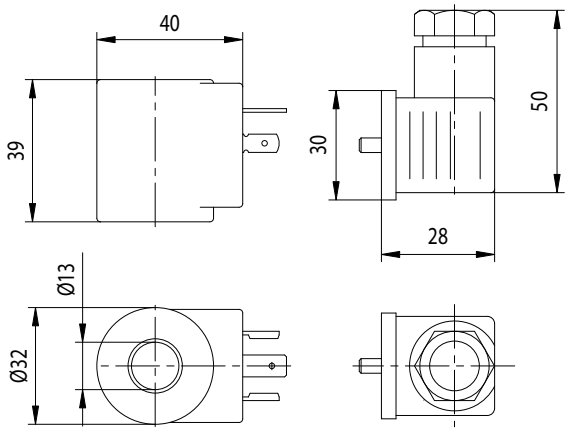

Hirschmann DIN43650

DESCRIPTION

A solenoid for hidraulic valves

SOLENOID SPECIFICATIONS

Push or pull as required
Max. static pressure 400 bar
Splash and dust-proof to IP65 DIN 40050
Power consumtion: EMA 100 - 18 or 20 W
EMA 50 - 12, 14 or 19W
Duty cycle ED 100%

Warning: Normally closed valves (except for double locking valve) operate with DC and for AC coils. Normally open valves and double locking valves operate with DC coils only should a normally open solenoid valve be fitted in a circuit fed by AC power a rectifier and a RAC coil must be used.

VOLTAGE

Code	Solenoid
0	Without coil
12	12V DC
24	24V DC
11	110V RAC
22	220V RAC

CC 06-2

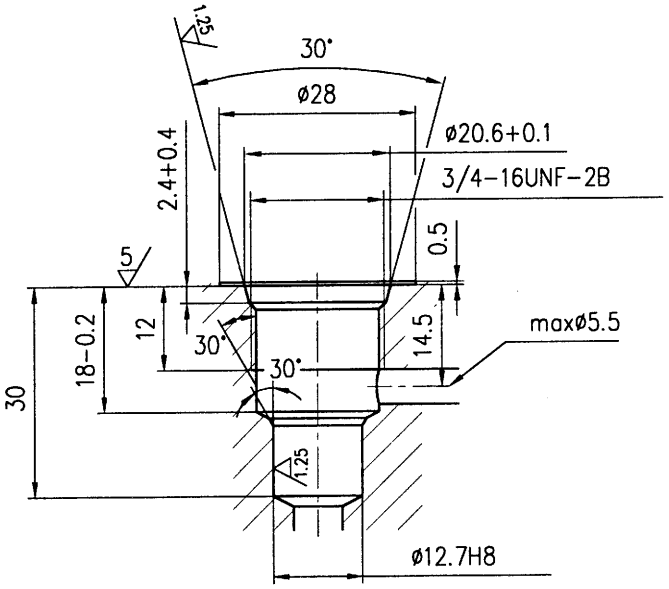
1.25
30°
ø28
ø20.6+0.1
3/4-16UNF-2B
2.4+0.4
0.5
5
12
18-0.2
30
30°
30°
14.5
maxø5.5
1.25
ø12.7H8

CC 08-2

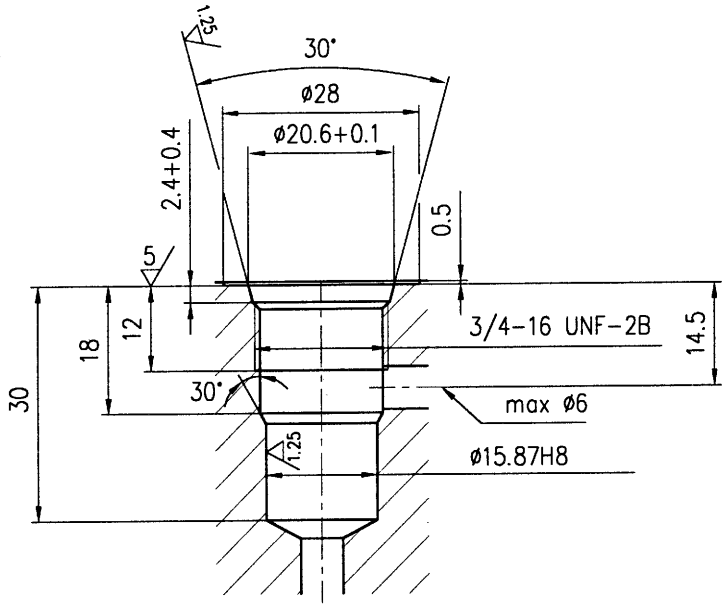
1.25
30°
ø28
ø20.6+0.1
2.4+0.4
0.5
5
12
18
30
30°
3/4-16 UNF-2B
14.5
max ø6
1.25
ø15.87H8

CC 08-2A

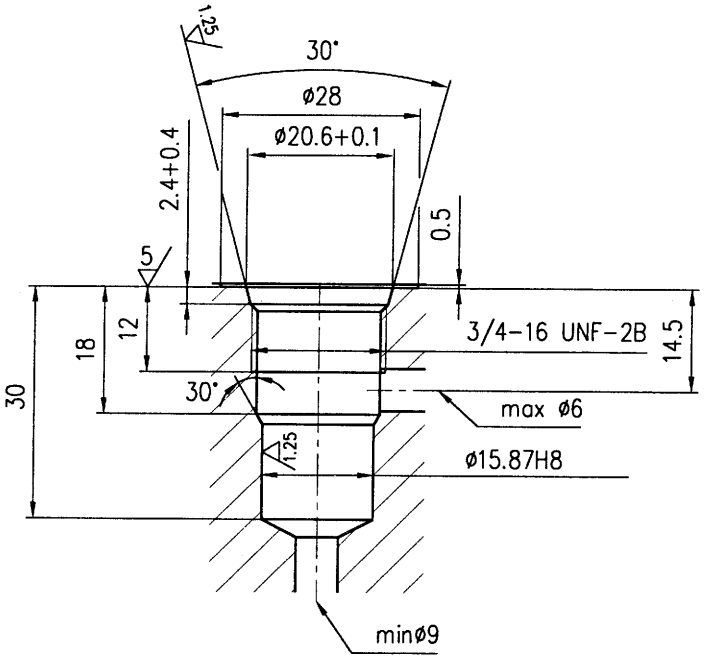

CC 08-3

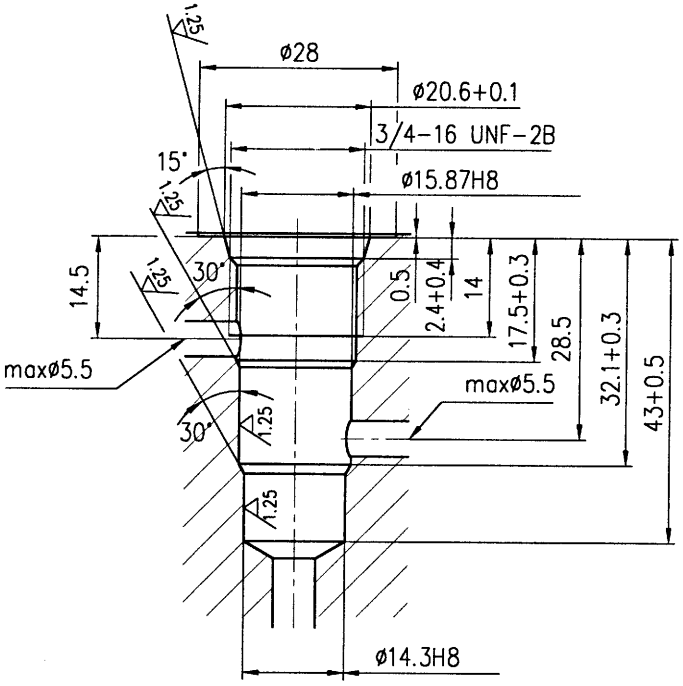

CC 08-3A

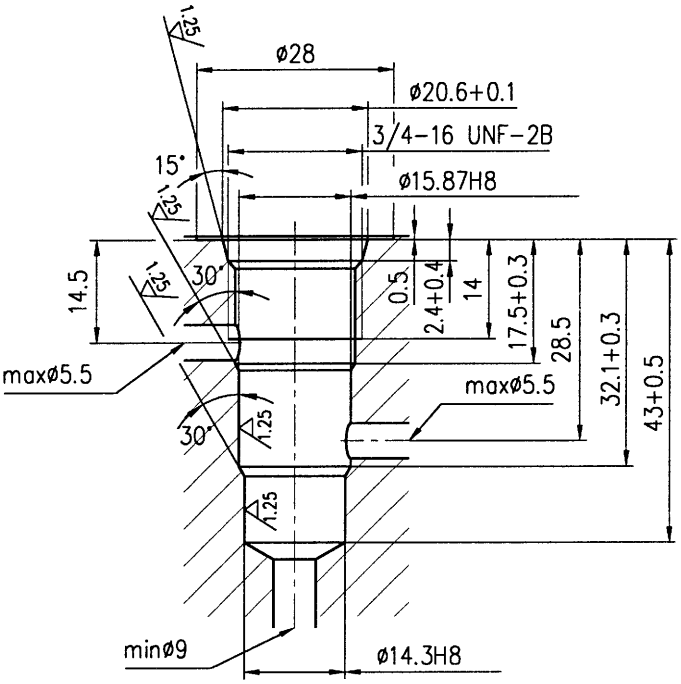

CC 08-4

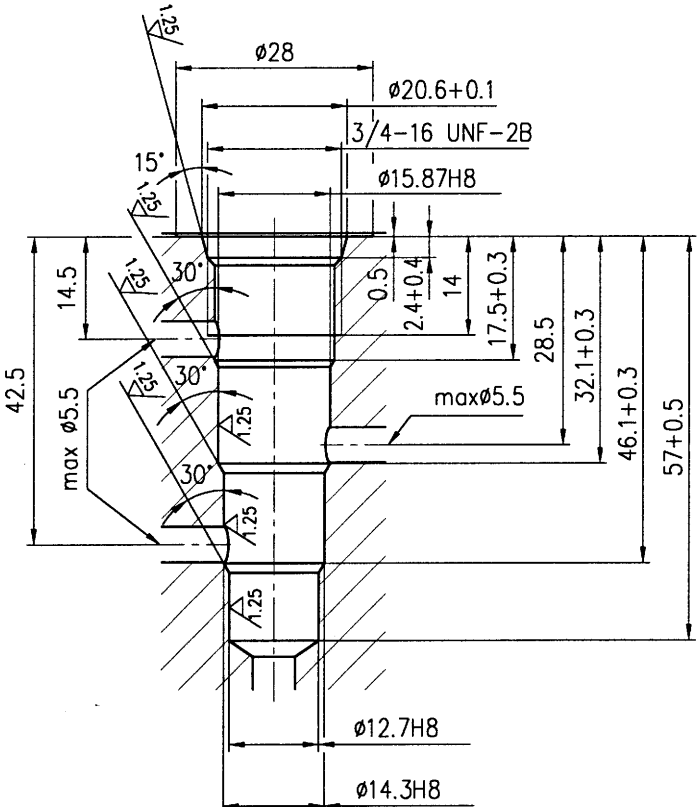

CC 10-2

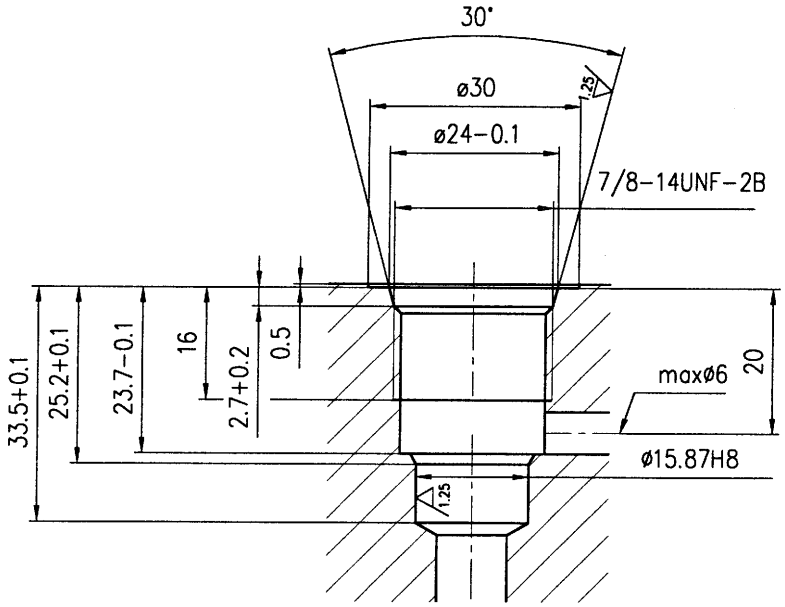
30°
ø30
ø24−0.1
7/8−14UNF−2B
1.25
33.5+0.1
25.2+0.1
23.7−0.1
16
2.7+0.2
0.5
20
maxø6
ø15.87H8
1.25

CC 10-3

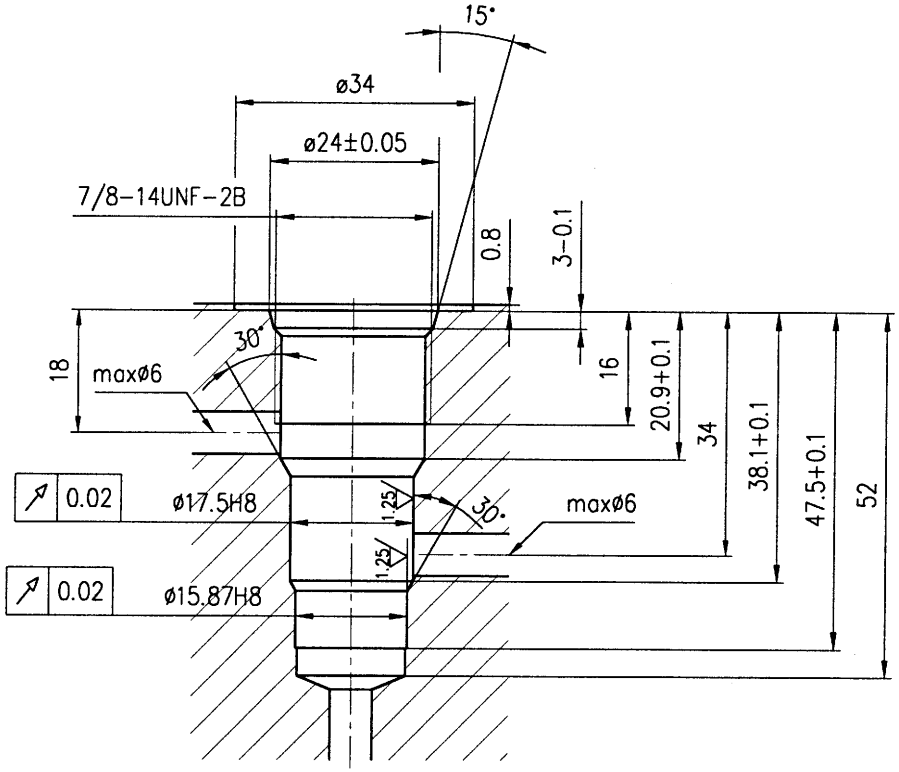
15°
ø34
ø24±0.05
7/8−14UNF−2B
0.8
3−0.1
18
30°
maxø6
16
20.9+0.1
34
38.1+0.1
47.5+0.1
52
0.02
ø17.5H8
1.25
30°
maxø6
1.25
0.02
ø15.87H8

CC 10-3S

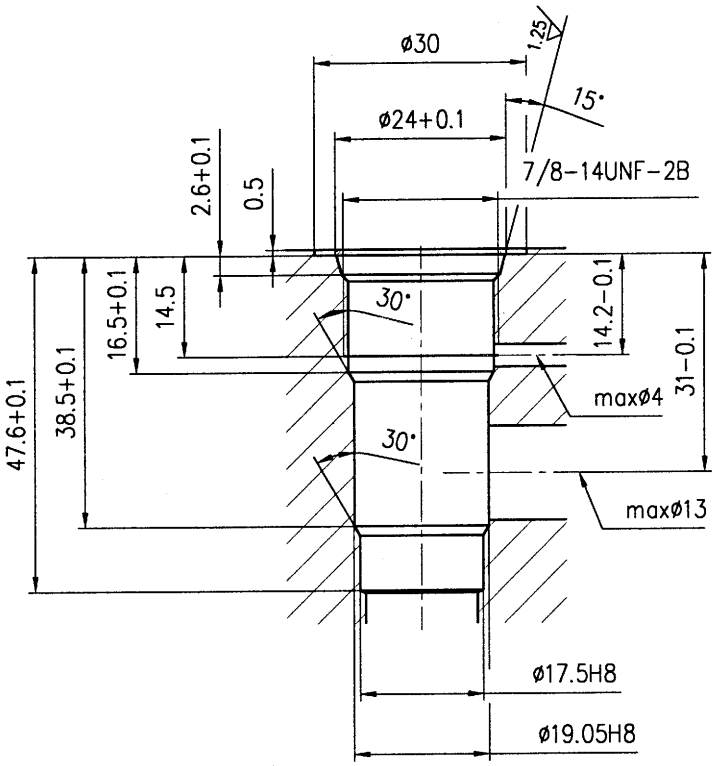

CC 10-4